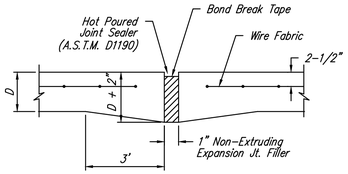


## EXPANSION JOINT

NOTE: Extra Thickness to be Subsidiary to Price of Square Yards Pavement

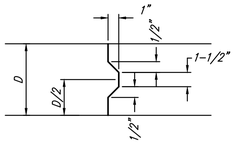


## KEYWAY DETAIL

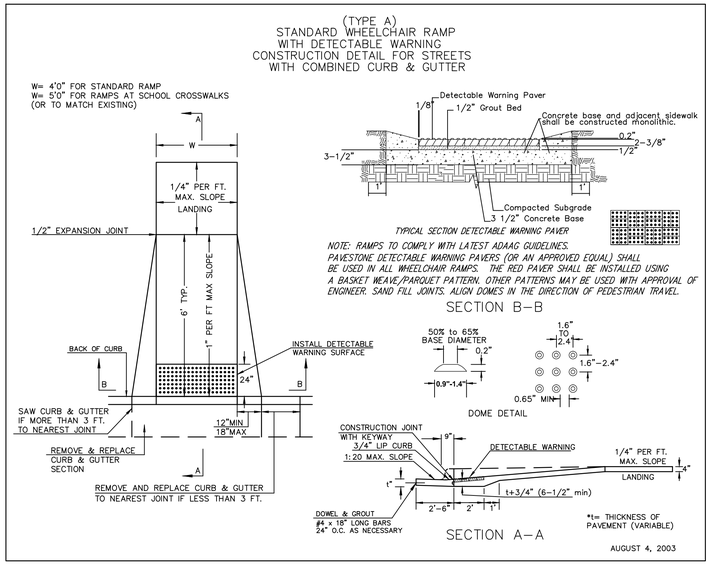


## WHEELCHAIR RAMP DETAIL

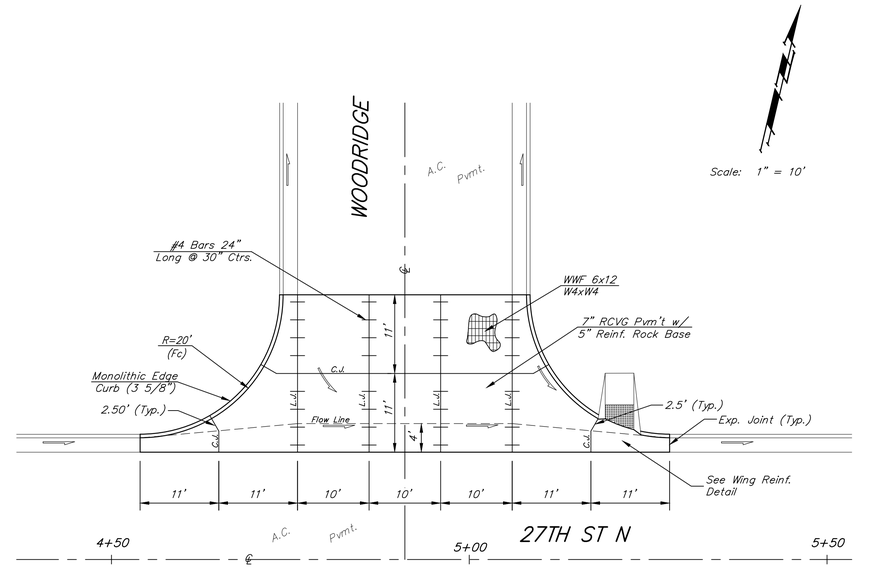


## VALLEY GUTTER DETAIL

NOTE: 6" X 12" W4XW4 Wire Fabric Reinforcing Shall Be Placed So That The Wires With The 6" Spacing Will Run Parallel With The Longitudinal Joints.

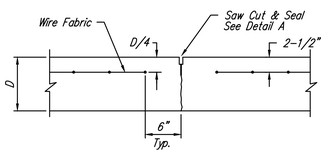


## CONTRACTION JOINT DETAIL (C.J.)

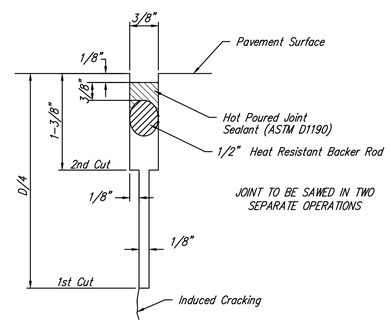


## SAW JOINT DETAIL "A"

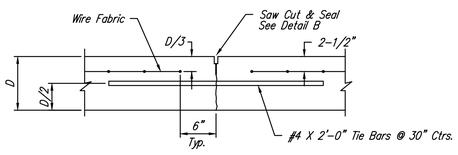


## LONGITUDINAL JOINT DETAIL (L.J.)

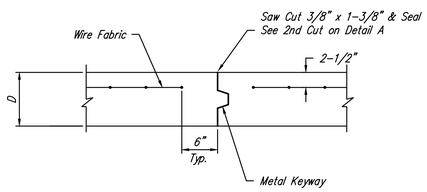


## OPTIONAL CONTRACTION JOINT (CONSTRUCTION JOINT)

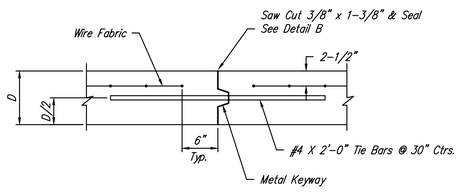


## OPTIONAL LONGITUDINAL JOINT DETAIL (L.J.) (CONSTRUCTION JOINT)

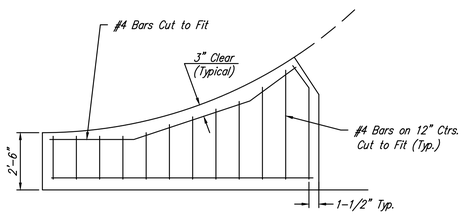


## WING REINFORCING DETAIL

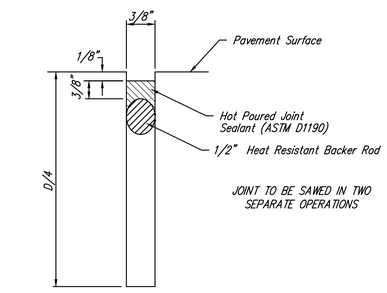


## SAW JOINT DETAIL "B"

Baughman

VALLEY GUTTER DETAILS

Baughman Company, P.A. 315 Ellis St. Wichita, KS 67211 P 316.262.7271 F 316.262.0149
ENGINEERING | SURVEYING | PLANNING | LANDSCAPE ARCHITECTURE

| | |
|---|---|
| PROJECT NUMBER | DESIGN STAFF / DRAWN STAFF |
| REVISIONS: | APPROVED / DATE 08/13 |
| | SCALE NONE |
| | SHEET 6 OF 31 |

E:\Projects\Woods North 3rd_11-12-F847\Engineering\Phase 2\Str_13-08-E945\StrSWS_13-08-E945 Details.dwg