STATE	PROJECT NO.	YEAR	SHEET NO.	TOTAL SHEETS
KANSAS	472-85066	2014	121	388

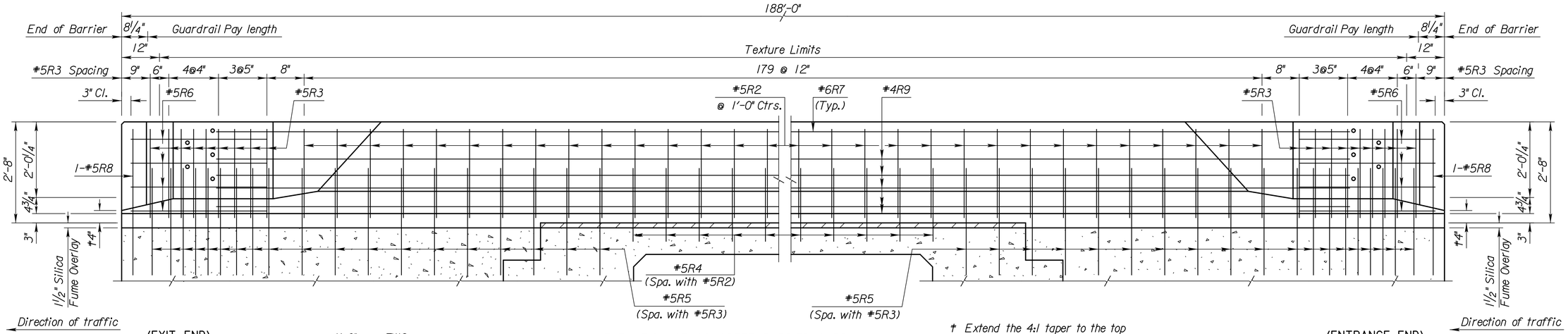

ELEVATION OF CONCRETE BARRIER CURB

† Extend the 4:1 taper to the top of the approach slab curb.

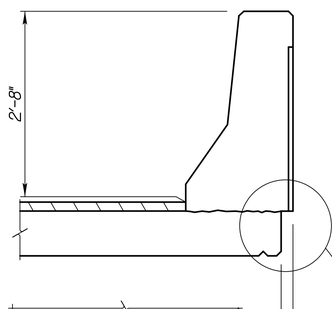

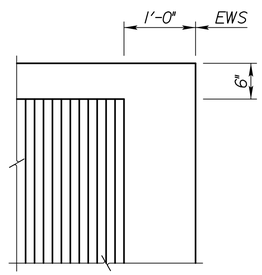

BARRIER TEXTURE LIMITS

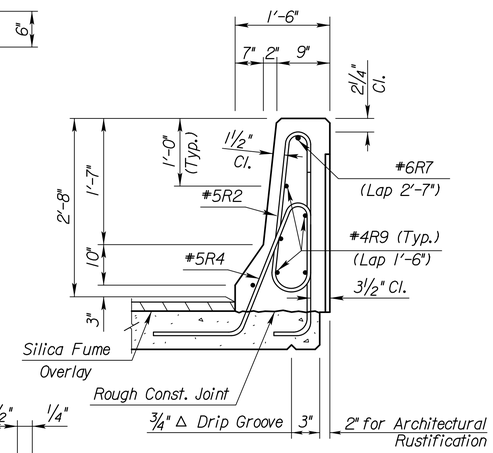

SECTION THRU BARRIER

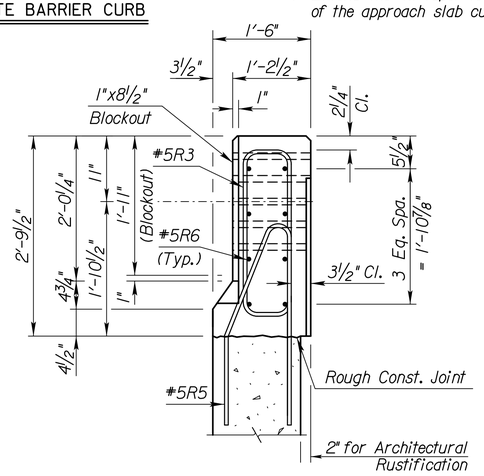

SECTION THRU BARRIER - END VIEW
(Entrance and Exit Curb)

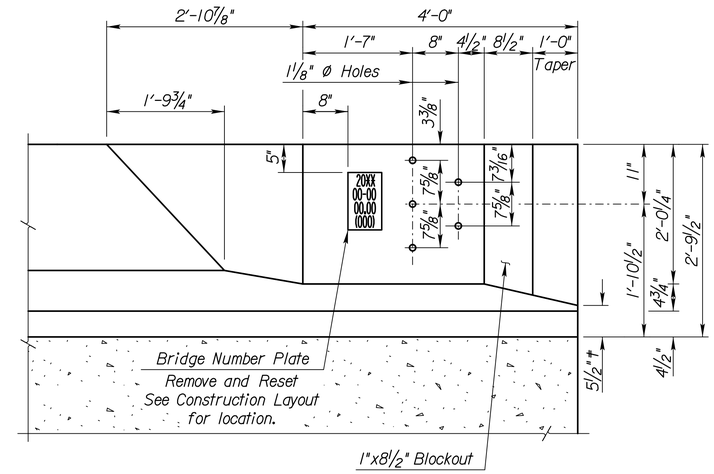

ELEVATION OF TYPICAL END

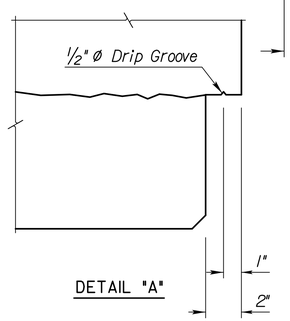

DETAIL "A"

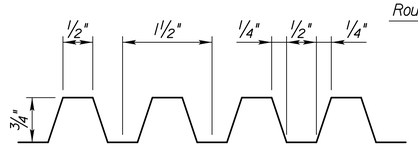

TYPICAL PANEL TEXTURE

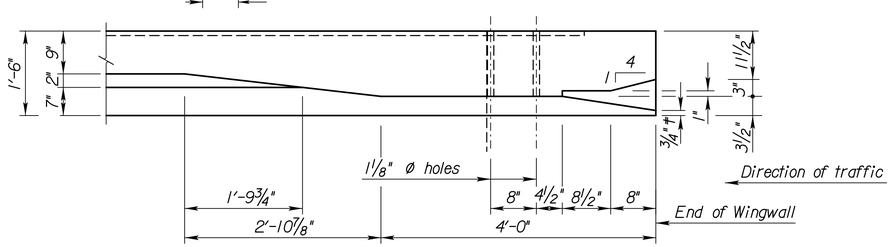

PLAN OF TYPICAL END

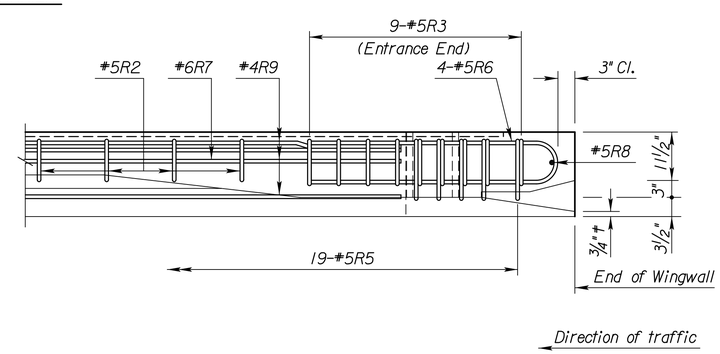

PLAN OF TYPICAL END

NO.	DATE	REVISIONS	BY	APP'D
3				
2	10-4-07	Grove Conflict Resolved	JPJ	KFH
1	7-24-06	Current Release	JPJ	KFH

KANSAS DEPARTMENT OF TRANSPORTATION

Br. No. 96-87-32.78 (412) E.B. Sta. 463+49.36
Br. No. 96-87-32.79 (411) W.B. Sta. 463+48.72

F4 BARRIER CURB

K-96 OVER GREENWICH ROAD

Proj. No. 472-85066 Sedgwick Co.

SHEET NO. OF	SCALE	APP'D	
DESIGNED	DETAILED	QUANTITIES	CADD
DESIGN CK.	DETAIL CK.	QUAN. CK.	CADD CK.

Std. Base File: br184a.dgn
Plotted By: msn
Plot Location:
File: I:\2009\09521\Office Check 03-2012\Bridge\09521-BR-br184a.dgn
Plot Date: 12/30/2013