STATE	PROJECT NO.	YEAR	SHEET NO.	TOTAL SHEETS
KANSAS	472-85066	2014	229	388

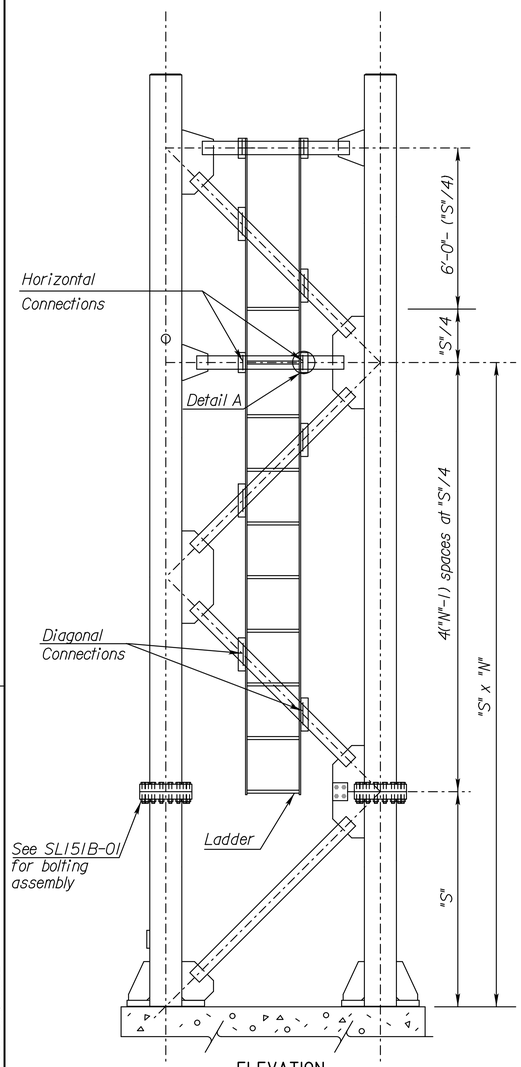

ELEVATION

Note: Always mount ladder on outside of end support. See "Construction Layout" for end support(s) to be used and Dimensions "S" & "N".

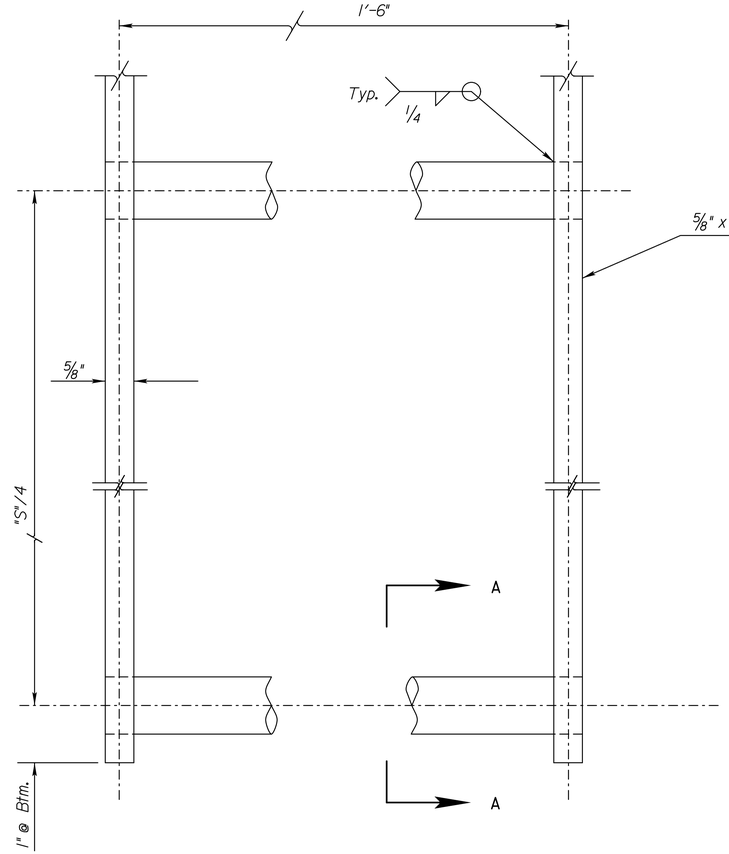

ELEVATION

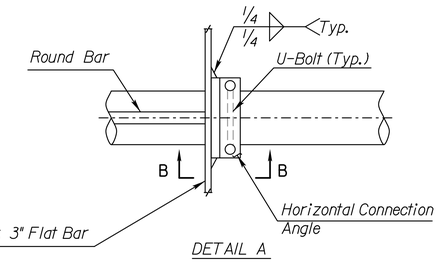

DETAIL A

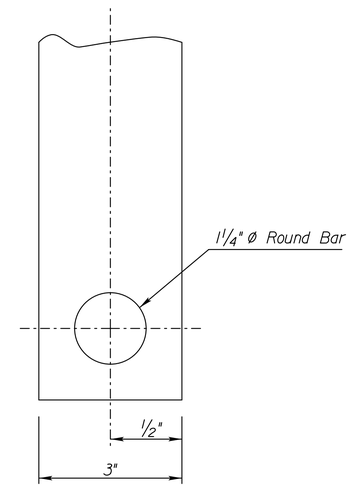

SECTION A-A

LADDER DETAILS

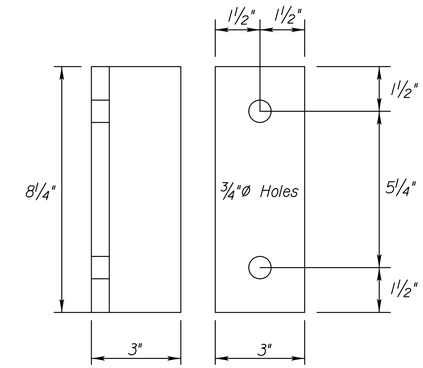

HORIZONTAL CONNECTION ANGLE

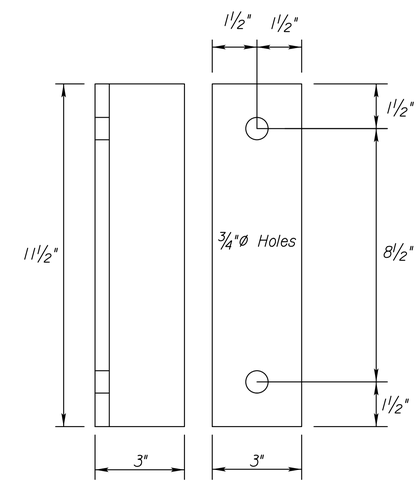

DIAGONAL CONNECTION ANGLE

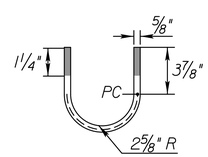

HORIZONTAL U-BOLT

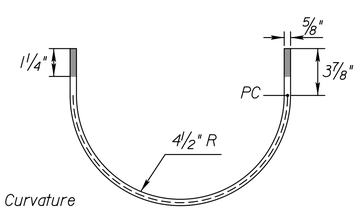

PC = Point of Curvature

DIAGONAL U-BOLT

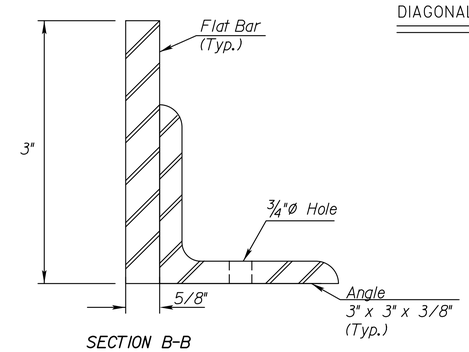

SECTION B-B

Revised Ladder Connectors

NO.	DATE	REVISIONS	BY	APP'D
1	5/11/11	Removed Steel Option, Increase ladder thickness & U bolt sizes	KMP	TLF

KANSAS DEPARTMENT OF TRANSPORTATION

STANDARD STRUCTURAL SIGN SUPPORTS
SPAN TYPE OVERHEAD
LADDER DETAILS

~~SL151A-04~~

FHWA APPROVAL		6-9-2011	APP'D	Terry L. Fleck	
DESIGNED	DETAILED	LES	QUANTITIES	CADD	DJE
DESIGN CK.	DETAIL CK.	DRE	QUAN.CK.	CADD CK.	LES

Std. Base File:
Plotted By: dp
Plot Location:
File: I:\2009\09521\Overhead Signing - KDOT\EN357001\POS12.dgn
Plot Date: 30-DEC-2013 16:22