| STATE | PROJECT NO. | YEAR | SHEET NO. | TOTAL SHEETS |
|---|---|---|---|---|
| KANSAS | 1858 | 2014 | 15 | 43 |

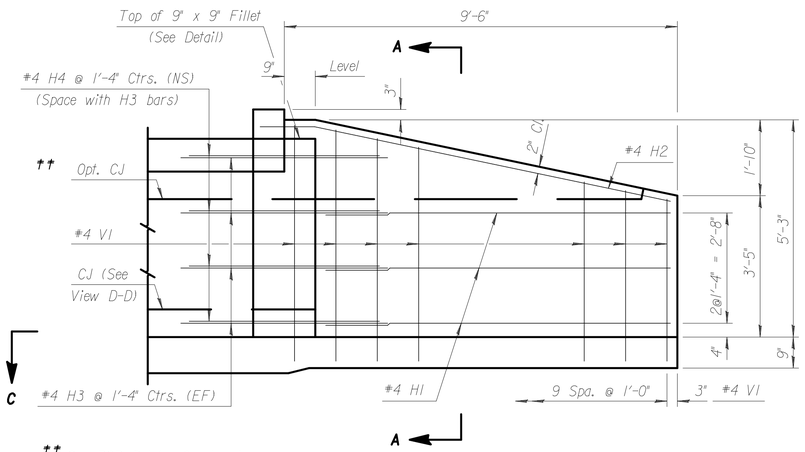


†† See RCB Details for location of construction joint.

ELEVATION OF WINGWALL
(Backface Shown)

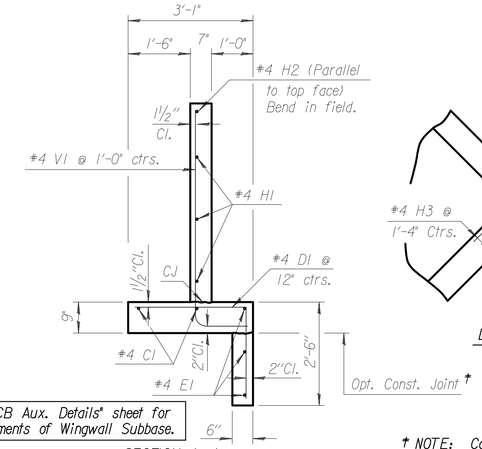


See "RCB Aux. Details" sheet for requirements of Wingwall Subbase.

SECTION A–A

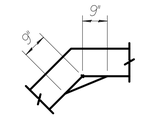


Fillet Detail

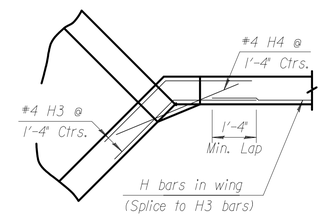


DETAIL OF 9" x 9" FILLET
(Plan View)

## GENERAL NOTES

UNIT STRESSES: Grade 4.0 Concrete; f'c = 4,000 p.s.i.
Reinforcing Steel; fy = 60,000 p.s.i.

CONCRETE: Grade 4.0 Concrete shall be used throughout. Bevel all exposed edges with a 3/4 inch triangular moulding.

REINFORCING: All reinforcing shall conform to ASTM A615, Grade 60. Welded Wire Fabric shall conform to ASTM A185. All dimensions relative to reinforcing steel shall be to centerline of bar unless otherwise noted.

QUANTITIES: Wingwall Quantities include all quantities outside the neat lines of the box, excluding the hubguard.

APRON: A 5" concrete slab shall be constructed between the downstream wings in locations subject to scour only when specified on the plans or by the Engineer. Wire Reinforcing mesh shall be electrically welded and shall be composed of 6 x 6-W1.4 x W1.4 welded wire fabric and shall be classified as pounds of reinforcing.

FOUNDATION AND BACKFILL MATERIAL: Soils judged as high plasticity clays, fat clays, expansive clays, or organic clays are unsuitable for foundation and/or backfill material for wingwalls and will not be used. Where these conditions exist, Foundation Stabilization and/or Granular Backfill (Wingwalls) shall be used as determined by the Engineer. See "RCB Auxiliary Details" sheet for additional details.

† NOTE: Const. Jt. may be used at Contractor's option when approved by the Engineer. D1 bars or mesh may be spliced thus: Minimum overlap shall be 1'-3". No increase in quantities or cost shall be allowed when Contractor elects this option.

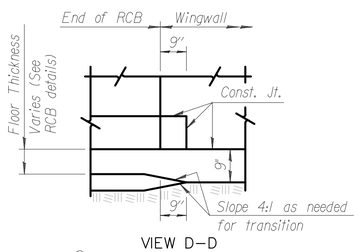


VIEW D–D

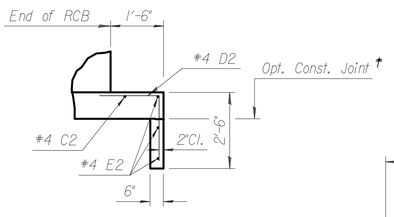


SECTION E–E

NOTE:
EF = Each Face
NS = Near Side
FS = Far Side
CJ = Const. Joint

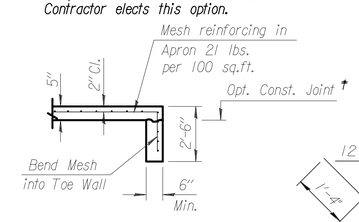


SECTION B–B

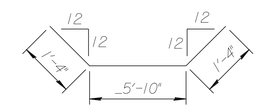


E2

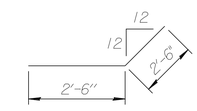


H3

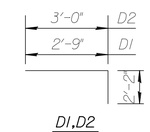


D1,D2

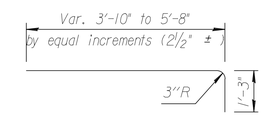


V1
(2 Req'd., each length)

BENDING DIAGRAM
(All dimensions are out to out of bars.)

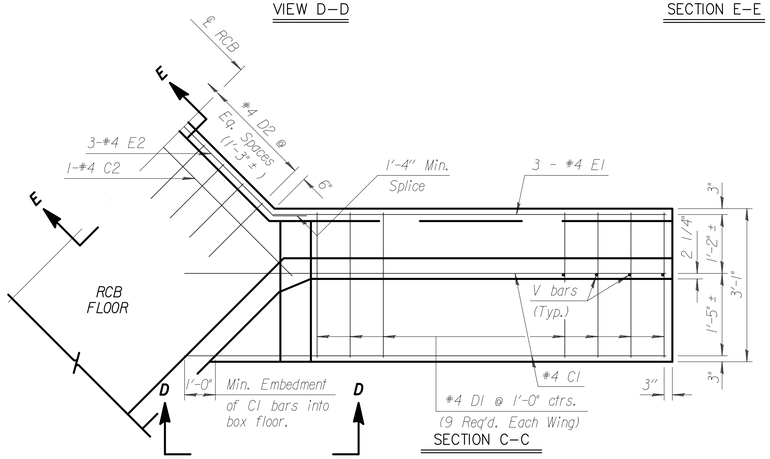


SECTION C–C

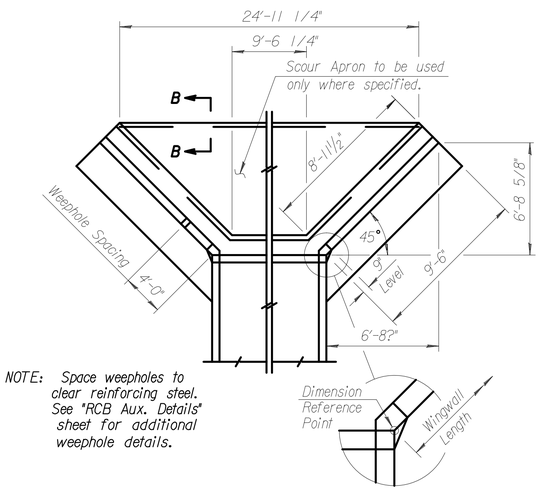


NOTE: Space weepholes to clear reinforcing steel. See "RCB Aux. Details" sheet for additional weephole details.

WING DIMENSIONS FOR NORMAL BOX
(3½:1 Embankment Slope)

Quantities listed below are included in the Summary of Quantities shown on the RCB details.

| WINGWALL QUANTITIES (One End Only) | |
|---|---|
| Concrete (Grade 4.0): | |
| Wingwalls | 4.5 CY. |
| Apron | 1.9 CY. |
| Soil Saver | 0.0 CY. |
| Reinforcing Steel | 361 Lbs. |
| Welded Wire Fabric | 16 Lbs. |

NOTE: Reinforcing Bar List is for both wings at one end of box only.

✱ See Bending Diagram

| | | #4C1 | #4D1 | #4E1 | #4C2 | #4D2 | #4E2 | #4V1 | #4H1 | #4H2 | #4H3 | #4H4 |
|---|---|---|---|---|---|---|---|---|---|---|---|---|
| 0° Skew | No. | 4 | 18 ✱ | 6 | 1 | 5 ✱ | 3 ✱ | 20 | 6 | 2 | 16 ✱ | 8 |
| | Length | 11'-7" | 4'-11" | 8'-9" | 6'-8" | 5'-2" | 8'-6" | ✱ | 8'-4" | 10'-3" | 5'-0" | 3'-0" |

| NO. | DATE | REVISIONS | BY | APP'D |
|---|---|---|---|---|
| | | | | |

KANSAS DEPARTMENT OF TRANSPORTATION
Sta. 0+00.00
4 ft Rise (0° SKEW)
~~BR-10.00.04~~ J-23.7 Harvey Co.

| FHWA APPROVAL | 6-5-91 | APP'D | KENNETH F. HURST |
|---|---|---|---|
| DESIGNED | DETAILED | QUANTITIES | TRACED |
| DESIGN CK. | DETAIL CK. | QUAN.CK. | TRACE CK. |

FINAL

Engineer: T. AUSTIN
Designer: M. TUCKER
Poe Job No.: 1858
Date: JANUARY 2014

Sheet 15 of 43

| No. | Date | By | Approved | Revision |
|---|---|---|---|---|
| | | | | |

SOUTHFORK COMMERCIAL ADDITION
PAVING & DRAINAGE IMPROVEMENTS
FLARED WINGWALLS
CITY OF WICHITA, KANSAS
GARY JANZEN, P.E. – CITY ENGINEER
PROJECT NO. 468-84826 OCA NO. (751507)
PROJECT NO. 472-85050 OCA NO. (766279)


POE & ASSOCIATES, INC.
CONSULTING ENGINEERS
5940 E. Central, Suite 200 ■ Wichita, KS 67208-4242
Phone 316/685-4114 ■ FAX 316/685-4444