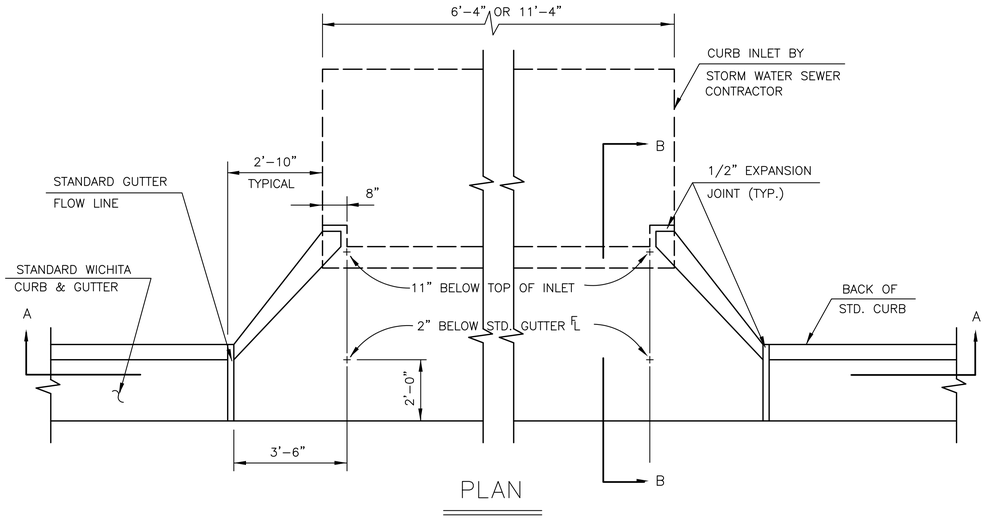

PLAN

GENERAL NOTES

1. USE THE CONCRETE MIX SPECIFIED FOR CITY OF WICHITA CONCRETE PAVEMENT. ALL EXPOSED EDGES SHALL BE FINISHED WITH AN EDGING TOOL.
2. TYPE 1A INLET HOOKUP WILL BE PAID EACH REGARDLESS OF SIZE.
3. ADDITIONAL CURB & GUTTER CONSTRUCTION NECESSARY TO CONNECT SET BACK INLET TO PAVEMENT WILL BE PAID FOR AT THE UNIT PRICE BID FOR EACH INLET

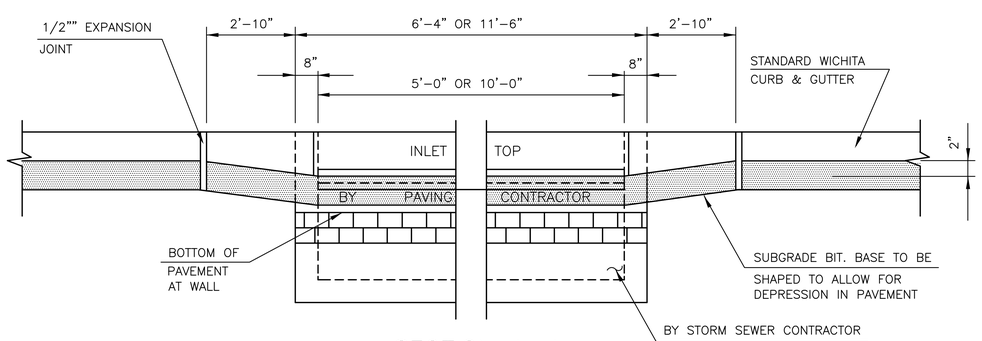

SECTION A-A

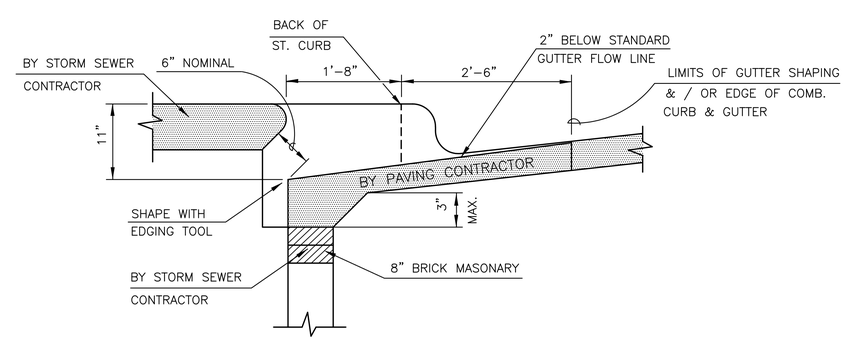

SECTION B-B

TYPE 1A INLET HOOKUP

(BY PAVING CONTRACTOR)

MKEC
Wichita, KS • 316-684-9600

PAVING & INCIDENTAL DRAINAGE FOR
COURTYARDS AT AUBURN HILLS
PHASE 1

©2013
MKEC Engineering
All Rights Reserved
www.mkec.com
These drawings and their contents, including, but not limited to, all concepts, designs, & ideas are the exclusive property of MKEC Engineering (MKEC), and may not be used or reproduced in any way without the express consent of MKEC.

TYPE 1A INLET HOOKUP

PROJECT NO.	472-85128
DATE	MAR. 2014
SCALE	NO SCALE

DESIGNED	DRAWN	CHECKED
MKEC	MKEC	MKEC

NO.	REVISION	DATE
#	----	MM/DD/YYYY

SHEET NO.
06 OF 52

J:\PROJECTS\2013\10292_PERFECTION_COURTYARDS_AT_AUBURN\5-CIVIL\CAD\PAV\PHASE 1\DETAILS\1325\ED04.DWG

PLOTTED: Monday, March 17, 2014 @ 01:37PM