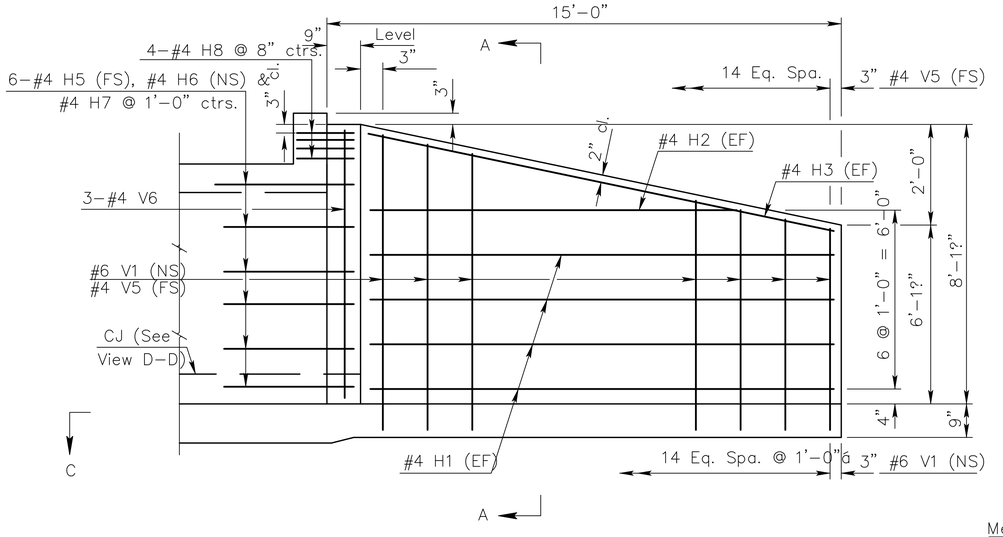

ELEVATION OF WINGWALL

(Backface Shown)

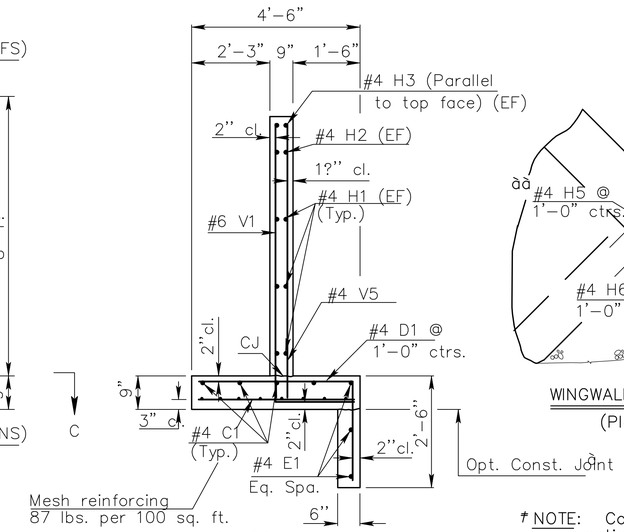

SECTION A-A

See "RCB Aux. Details" sheet for additional requirements.

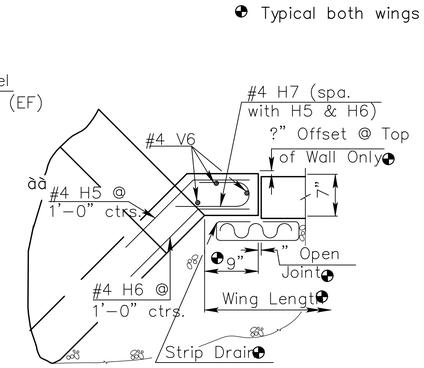

WINGWALL JOINT DETAIL

(Plan View)

GENERAL NOTES

DESIGN SPECIFICATION: AASHTO LRFD Spec., 2007 Ed., 2009 Int.

DESIGN LOADING: HL93

UNIT STRESSES: Grade 4.0 Concrete; f'c = 4,000 p.s.i.
Reinforcing Steel; fy = 60,000 p.s.i.

CONCRETE: Grade 4.0 Concrete shall be used throughout. Bevel all exposed edges with a *f'* triangular moulding.

REINFORCING: All reinforcing shall conform to ASTM A615, Grade 60. Welded Wire Fabric shall conform to ASTM A185. All dimensions relative to reinforcing steel shall be to centerline of bar unless otherwise noted. Wire Reinforcing mesh shall be electrically welded and shall be composed of 6 x 6– W6 x W6 welded wire fabric and shall be classified as pounds of reinforcing and included in the total quantity for the bid item RCBC (3–8'x5')

APRON: A 5" concrete slab shall be constructed between the downstream wings in locations subject to scour only when specified on the plans or by the Engineer.

BACKFILL MATERIAL: Use Granular Backfill material meeting the requirements of SB–1, SB–2, SCA–2, SCA–3 or SCA–5. Backfill all wings to limits shown on the "RCB Auxiliary Sheet".

FILTER FABRIC: Separate in–situ material from granular backfill with approved filter fabric complying with Section 1710. Filter Fabric is subsidiary to RCBC (3–8'x5')

FOUNDATION STABILIZATION: Use Foundation Stabilization on all wingwalls unless founded on rock or granular material.

* NOTE: Const. Jt. may be used at Contractor's option when approved by the Engineer. D1 bars or mesh may be spliced thus. Minimum overlap shall be 1'–3". No increase in quantities or cost shall be allowed when Contractor elects this option.

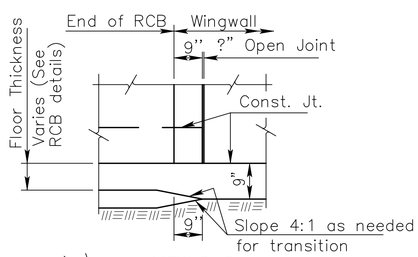

VIEW D–D

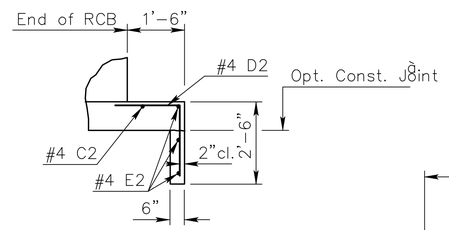

SECTION E–E

NOTE:
EF = Each Face
NS = Near Side
FS = Far Side
CJ = Const. Joint

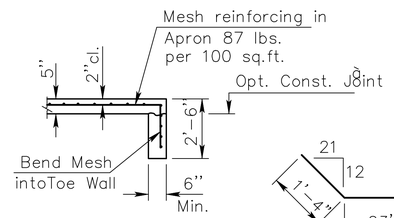

SECTION B–B

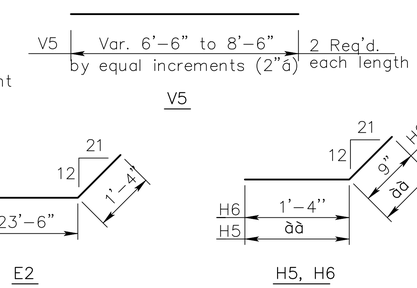

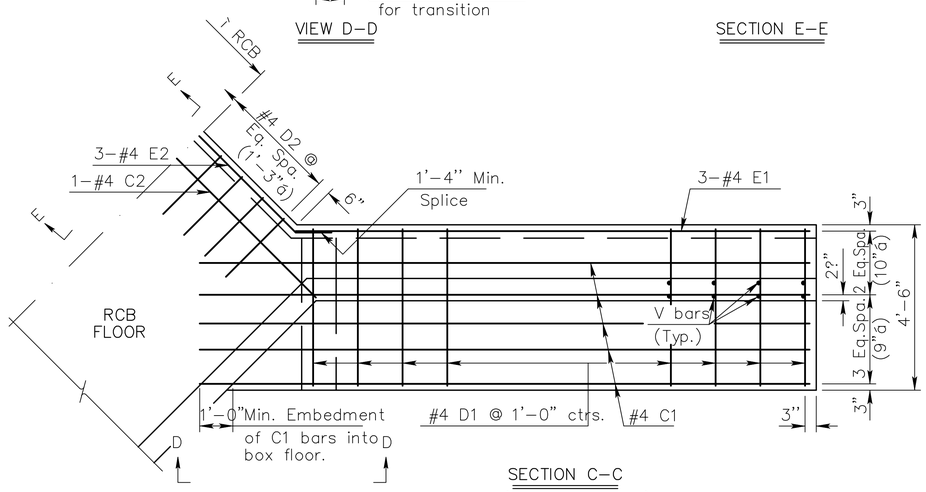

SECTION C–C

(Plan of Footing)

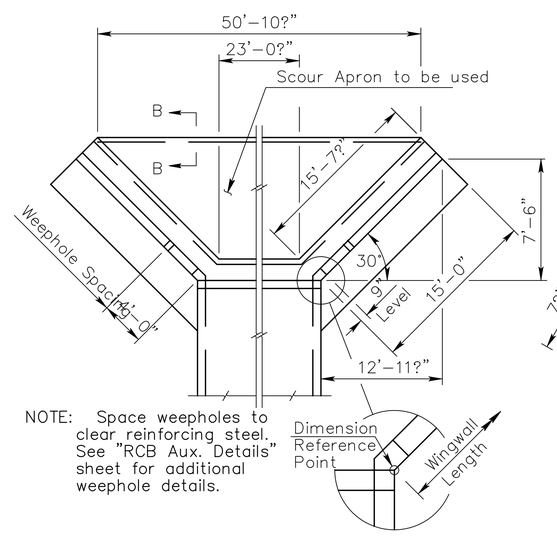

NOTE: Space weepholes to clear reinforcing steel. See "RCB Aux. Details" sheet for additional weephole details.

WING DIMENSIONS FOR NORMAL BOX

(3?:1 Embankment Slope)

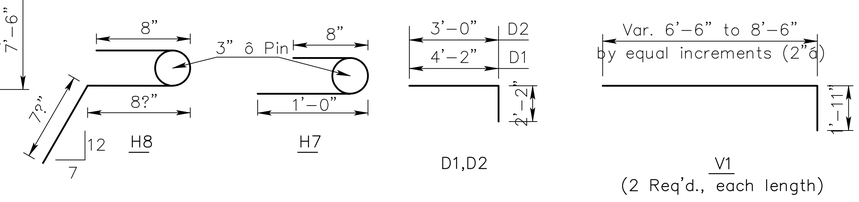

BENDING DIAGRAM

(All dimensions are out to out of bars.)
àà Bend in Field

NOTE: Reinforcing Bar List is for both wings at right end of box only. ñ See Bending Diagram

		#4C1	#4D1	#4E1	#4C2	#4D2	#4E2	#6V1	#4H1	#4H2	#4H3	#4H5	#4H6	#4H7	#4H8	#4V5	#4V6
0° Skew	No.	10	32ñ	6	1	19ñ	3ñ	30	24	4	4	12ñ	12ñ	12ñ	8ñ	30	6
	Length	16'–11"	6'–4"	15'–6"	34'–0"	5'–2"	26'–2"	ñ	13'–10"	7'–10"	14'–0"	1'–10"	2'–1"	1'–9"	2'–1"	ñ	7'–9"

CHARLES D. MAY, JR. LICENSED 10971 KANSAS PROFESSIONAL ENGINEER
6-11-14

CITY OF WICHITA

Sta. 123+00 Rt.
FLARED WINGWALLS
5 ft Rise (0° Skew)

Schwab Eaton
8615 W. Frazier Lane, Suite 2
Wichita, KS 67212
Phone: 316-722-4472

DESIGNED JJM	DRAWN SRS	SCALE	SHEET NO.
CHECKED	DATE 02/14	No Scale	30