NOTE: POINT A MUST BE HIGHER THAN POINT B SO THAT WATER FLOWS OVER THE SILT FENCE FABRIC AND NOT AROUND IT.

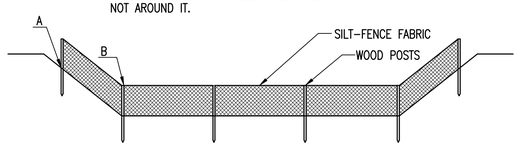

ELEVATION

SILT FENCE DITCH CHECKS

(STREAM PROTECTION)

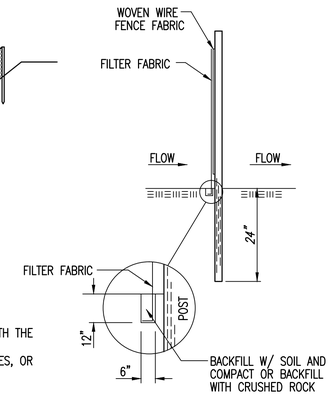

ANCHOR TRENCH DETAIL

MATERIAL SPECIFICATION:

SILT FENCE FABRIC SHOULD CONFORM TO THE AASHTO M288 96 SILT FENCE SPECIFICATION.
THE POSTS USED TO SUPPORT THE SILT FENCE FABRIC SHOULD BE A HARDWOOD MATERIAL WITH THE FOLLOWING MINIMUM DIMENSIONS: 2" SQUARE (NOMINAL) BY 4' LONG.
SILT FENCE FABRIC SHOULD BE ATTACHED TO THE WOODEN POSTS WITH STAPLES, WIRE, ZIP TIES, OR NAILS.

PLACEMENT:

PLACE SILT FENCE IN DITCHES WHERE IT IS UNLIKELY THAT IT WILL BE OVERTOPPED.
WATER SHOULD FLOW THROUGH A SILT FENCE DITCH CHECK, NOT OVER IT. SILT FENCE DITCH CHECKS OFTEN FAIL WHEN OVERTOPPED.
SILT FENCE DITCH CHECKS SHOULD BE PLACED PERPENDICULAR TO THE FLOWLINE OF THE DITCH.
THE SILT FENCE SHOULD EXTEND FAR ENOUGH SO THAT THE GROUND LEVEL AT THE ENDS OF THE FENCE IS HIGHER THAN THE TOP OF THE LOW POINT OF THE FENCE. THIS PREVENTS WATER FROM FLOWING AROUND THE CHECK.
SILT FENCE DITCH CHECKS SHOULD NOT BE PLACED IN DITCHES WHERE HIGH FLOWS ARE EXPECTED. ROCK CHECKS SHOULD BE USED INSTEAD.
SILT FENCE SHOULD BE PLACED IN DITCHES WITH SLOPES OF 6% OR LESS. FOR SLOPES STEEPER THAN 6%, ROCK CHECKS SHOULD BE USED.

THE FOLLOWING TABLE PROVIDES CHECK SPACING FOR A GIVEN DITCH GRADE:

DITCH CHECK DITCH GRADE (%)	SPACING CHECK SPACING (FEET)
0.5	200
1.0	200
2.0	100
3.0	65
4.0	50
5.0	40
6.0	30

PROPER INSTALLATION METHOD:

EXCAVATE A TRENCH PERPENDICULAR TO THE DITCH FLOWLINE THAT IS AT LEAST 12" DEEP BY 6" WIDE.
EXTEND THE TRENCH IN A STRAIGHT LINE ALONG THE ENTIRE LENGTH OF THE PROPOSED DITCH CHECK.
PLACE THE SOIL ON THE UPSTREAM SIDE OF THE TRENCH FOR LATER USE.
ROLL OUT A CONTINUOUS LENGTH OF SILT FENCE FABRIC ON THE DOWNSTREAM SIDE OF THE TRENCH.
PLACE THE EDGE OF THE FABRIC IN THE TRENCH STARTING AT THE TOP UPSTREAM EDGE OF THE TRENCH. LINE TWO SIDES OF THE TRENCH WITH THE FABRIC AS SHOWN ON DETAIL. BACKFILL OVER THE FABRIC IN THE TRENCH WITH THE EXCAVATED SOIL AND COMPACT. AFTER FILLING THE TRENCH, APPROXIMATELY 24" TO 36" OF SILT FENCE FABRIC SHOULD REMAIN EXPOSED.
LAY THE EXPOSED SILT FENCE ON THE UPSTREAM SIDE OF THE TRENCH TO CLEAR AN AREA FOR DRIVING IN THE POSTS. JUST DOWNSTREAM OF THE TRENCH, DRIVE POSTS INTO THE GROUND TO A DEPTH OF AT LEAST 24". PLACE POSTS NO MORE THAN 4' APART.
ATTACH THE SILT FENCE TO THE ANCHORED POST WITH STAPLES, WIRE, ZIP TIES, OR NAILS.

LIST OF COMMON PLACEMENT/INSTALLATION MISTAKES TO AVOID:

WATER SHOULD FLOW THROUGH A SILT FENCE DITCH CHECK-NOT OVER IT. PLACE SILT FENCE IN DITCHES WHERE IT IS UNLIKELY THAT IT WILL BE OVERTOPPED. SILT FENCE INSTALLATIONS QUICKLY DETERIORATE WHEN WATER OVERTOPS THEM.
DO NOT PLACE SILT FENCE POSTS ON THE UPSTREAM SIDE OF THE SILT FENCE FABRIC. IN THIS CONFIGURATION, THE FORCE OF THE WATER IS NOT RESTRICTED BY THE POSTS, BUT ONLY BY THE STAPLES (WIRE, ZIP TIES, NAILS, ETC.). THE SILT FENCE WILL RIP AND FAIL.
DO NOT PLACE A SILT FENCE DITCH CHECK DIRECTLY IN FRONT OF A CULVERT OUTLET. IT WILL NOT STAND UP TO THE CONCENTRATED FLOW.
DO NOT PLACE SILT FENCE DITCH CHECKS IN DITCHES THAT WILL LIKELY EXPERIENCE HIGH FLOWS. THEY WILL NOT STAND UP TO CONCENTRATED FLOW.
FOLLOW PRESCRIBED DITCH CHECK SPACING GUIDELINES. IF SPACING GUIDELINES ARE EXCEEDED, EROSION WILL OCCUR BETWEEN THE DITCH CHECKS.
DO NOT ALLOW WATER TO FLOW AROUND THE DITCH CHECK. MAKE SURE THAT THE DITCH CHECK IS LONG ENOUGH SO THAT THE GROUND LEVEL AT THE ENDS OF THE FENCE IS HIGHER THAN THE LOW POINT ON THE TOP OF THE FENCE.
DO NOT PLACE SILT FENCE DITCH CHECKS IN CHANNELS WITH SHALLOW SOILS UNDERLAIN BY ROCK. IF THE CHECK IS NOT ANCHORED SUFFICIENTLY, IT WILL WASH OUT.

INSPECTION AND MAINTENANCE:

SILT FENCE DITCH CHECKS SHOULD BE INSPECTED EVERY 7 DAYS AND WITHIN 24 HOURS OF A RAINFALL OF 1/2" OR MORE. THE FOLLOWING IS A LIST OF QUESTIONS THAT SHOULD BE ADDRESSED DURING EACH INSPECTION:

DOES WATER FLOW AROUND THE DITCH CHECK?
DOES WATER FLOW UNDER THE DITCH CHECK?
DOES THE SILT FENCE SAG EXCESSIVELY?
HAS THE SILT FENCE TORN OR BECOME DETACHED FROM THE POSTS?
DOES SEDIMENT NEED TO BE REMOVED FROM BEHIND THE DITCH CHECK?

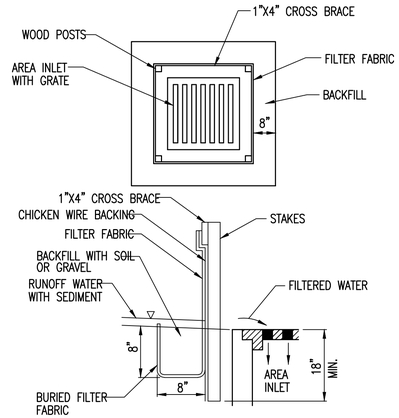

SILT FENCE BARRIERS FOR AREA INLETS

(INLET PROTECTION)

MATERIAL SPECIFICATION:

SILT FENCE FABRIC SHOULD CONFORM TO THE AASHTO M288 96 SILT FENCE SPECIFICATION.
THE WIRE OR POLYMERIC MESH BACKING USED TO HELP SUPPORT THE SILT FENCE FABRIC SHOULD CONFORM TO THE AASHTO M288 96 SILT FENCE SPECIFICATION.
THE POSTS USED TO SUPPORT THE SILT FENCE FABRIC SHOULD BE A HARDWOOD MATERIAL WITH THE FOLLOWING MINIMUM DIMENSIONS: 2" SQUARE (NOMINAL) BY 4' LONG.
THE MATERIAL USED TO FRAME THE TOPS OF THE POSTS SHOULD BE 1" BY 4" BOARDS.
SILT FENCE FABRIC AND SUPPORT BACKING SHOULD BE ATTACHED TO THE WOODEN POSTS AND FRAME WITH STAPLES, WIRE, ZIP TIES, OR NAILS.

PLACEMENT:

PLACE A SILT FENCE DROP INLET BARRIER IN A LOCATION WHERE IT IS UNLIKELY TO BE OVERTOPPED.
WATER SHOULD FLOW THROUGH SILT FENCE, NOT OVER IT. SILT FENCE BARRIERS FOR AREA INLETS OFTEN FAIL WHEN REPEATEDLY OVERTOPPED.
WHEN USED AS A BARRIER FOR AREA INLETS, SILT FENCE FABRIC AND POSTS MUST BE SUPPORTED AT THE TOP BY A WOODEN FRAME.
WHEN A SILT FENCE BARRIER FOR AREA INLETS IS LOCATED NEAR AN INLET THAT HAS STEEP APPROACH SLOPES, THE STORAGE CAPACITY BEHIND THE BARRIER IS DRASTICALLY REDUCED. TIMELY REMOVAL OF SEDIMENT MUST OCCUR FOR A BARRIER TO OPERATE PROPERLY IN THIS LOCATION.

PROPER INSTALLATION METHOD:

EXCAVATE A TRENCH AROUND THE PERIMETER OF THE AREA INLET THAT IS AT LEAST 8" DEEP BY 8" WIDE.
DRIVE POSTS TO A DEPTH OF AT LEAST 18" AROUND THE PERIMETER OF THE AREA INLET.
THE DISTANCE BETWEEN POSTS SHOULD BE 4' OR LESS. IF THE DISTANCE BETWEEN TWO ADJACENT CORNER POSTS IS MORE THAN 4', ADD ANOTHER POST(S) BETWEEN THEM.
CONNECT THE TOPS OF ALL THE POSTS WITH A WOODEN FRAME MADE OF 1" BY 4" BOARDS. USE NAILS OR SCREWS FOR FASTENING.
ATTACH THE WIRE OR POLYMERIC-MESH BACKING TO THE OUTSIDE OF THE POST/FRAME STRUCTURE WITH STAPLES, WIRE, ZIP TIES, OR NAILS.
ROLL OUT A CONTINUOUS LENGTH OF SILT FENCE FABRIC LONG ENOUGH TO WRAP AROUND THE PERIMETER OF THE AREA INLET. ADD MORE LENGTH FOR OVERLAPPING THE FABRIC JOINT. PLACE THE EDGE OF THE FABRIC IN THE TRENCH, STARTING AT THE OUTSIDE EDGE OF THE TRENCH. LINE ALL THREE SIDES OF THE TRENCH WITH THE FABRIC. BACKFILL OVER THE FABRIC IN THE TRENCH WITH THE EXCAVATED SOIL AND COMPACT. AFTER FILLING THE TRENCH, APPROXIMATELY 24" TO 36" OF SILT FENCE FABRIC SHOULD REMAIN EXPOSED.
ATTACH THE SILT FENCE TO THE OUTSIDE OF THE POST/FRAME STRUCTURE WITH STAPLES, WIRE, ZIP TIES, OR NAILS. THE JOINT SHOULD BE OVERLAPPED TO THE NEXT POST.

NOTE: WHEN A SILT FENCE BARRIER FOR AREA INLET IS PLACED IN A SHALLOW MEDIAN DITCH, MAKE SURE THAT THE TOP OF THE BARRIER IS NOT HIGHER THAN THE PAVED ROAD. IN THIS CONFIGURATION, WATER MAY SPREAD ONTO THE ROADWAY CAUSING A HAZARDOUS CONDITION.

LIST OF COMMON PLACEMENT/INSTALLATION MISTAKES TO AVOID:

WATER SHOULD FLOW THROUGH A SILT FENCE BARRIER FOR AREA INLET-NOT OVER IT. PLACE A SILT FENCE BARRIER FOR AREA INLET IN A LOCATION WHERE IT IS UNLIKELY TO BE OVERTOPPED. SILT FENCE BARRIER FOR AREA INLETS OFTEN FAIL WHEN REPEATEDLY OVERTOPPED.
DO NOT PLACE POSTS ON THE OUTSIDE OF THE SILT FENCE BARRIER FOR AREA INLET. IN THIS CONFIGURATION, THE FORCE OF THE WATER IS NOT RESISTED BY THE POSTS, BUT ONLY BY THE STAPLES (WIRE, ZIP TIES, NAILS, ETC.). THE SILT FENCE WILL RIP AND FAIL.
DO NOT INSTALL SILT FENCE BARRIER FOR AREA INLETS WITHOUT FRAMING THE TOP OF THE POSTS.
THE CORNER POSTS AROUND AREA INLETS ARE STRESSED IN TWO DIRECTIONS WHEREAS A NORMAL SILT FENCE IS ONLY STRESSED IN ONE DIRECTION. THIS ADDED STRESS REQUIRES MORE SUPPORT.

INSPECTION AND MAINTENANCE:

SILT FENCE BARRIER FOR AREA INLETS SHOULD BE INSPECTED EVERY 7 DAYS AND WITHIN 24 HOURS OF A RAINFALL OF 1/2" OR MORE. THE FOLLOWING IS A LIST OF QUESTIONS THAT SHOULD BE ADDRESSED DURING EACH INSPECTION:

DOES WATER FLOW UNDER THE SILT FENCE?
DOES THE SILT FENCE SAG EXCESSIVELY?
HAS THE SILT FENCE TORN OR BECOME DETACHED FROM THE POSTS?
DOES SEDIMENT NEED TO BE REMOVED FROM BEHIND THE AREA INLET BARRIER?

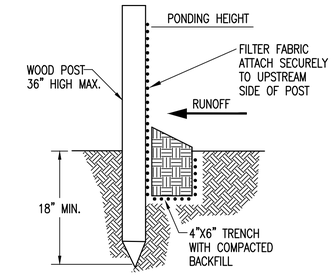

SILT FENCE BARRIERS

MATERIAL SPECIFICATION:

SILT FENCE FABRIC SHOULD CONFORM TO THE AASHTO M288 96 SILT FENCE SPECIFICATION.
THE POSTS USED TO SUPPORT THE SILT FENCE FABRIC SHOULD BE A HARDWOOD MATERIAL WITH THE FOLLOWING MINIMUM DIMENSIONS: 2" SQUARE (NOMINAL) BY 4' LONG.
SILT FENCE FABRIC SHOULD BE ATTACHED TO THE WOODEN POSTS WITH STAPLES, WIRE, ZIP TIES, OR NAILS.

PLACEMENT:

A SLOPE BARRIER SHOULD BE USED AT THE TOE OF A SLOPE WHEN A DITCH DOES NOT EXIST. THE SLOPE BARRIER SHOULD BE PLACED ON NEARLY LEVEL GROUND 5' TO 10' AWAY FROM THE TOE OF A SLOPE. THE BARRIER IS PLACED AWAY FROM THE TOE OF THE SLOPE TO PROVIDE ADEQUATE STORAGE FOR SETTLING OUT SEDIMENT.
WHEN PRACTICABLE, SILT FENCE SLOPE BARRIERS SHOULD BE PLACED ALONG CONTOURS TO AVOID A CONCENTRATION OF FLOW.
SILT FENCE SLOPE BARRIERS CAN ALSO BE PLACED ALONG RIGHT-OF-WAY FENCE LINES TO KEEP SEDIMENT FROM CROSSING ONTO ADJACENT PROPERTY. WHEN PLACED IN THIS MANNER, THE SLOPE BARRIER WILL NOT LIKELY FOLLOW CONTOURS.

PROPER INSTALLATION METHOD:

EXCAVATE A TRENCH THE LENGTH OF THE PLANNED SLOPE BARRIER THAT IS 6" DEEP BY 4" WIDE.
MAKE SURE THAT THE TRENCH IS EXCAVATED ALONG A SINGLE CONTOUR. WHEN PRACTICABLE, SLOPE BARRIERS SHOULD BE PLACED ALONG CONTOURS TO AVOID A CONCENTRATION OF FLOW. PLACE THE SOIL ON THE UPSLOPE SIDE OF THE TRENCH FOR LATER USE.
ROLL OUT A CONTINUOUS LENGTH OF SILT FENCE FABRIC ON THE DOWNSLOPE SIDE OF THE TRENCH.
PLACE THE EDGE OF THE FABRIC IN THE TRENCH STARTING AT THE TOP UPSLOPE EDGE. LINE ALL THREE SIDES OF THE TRENCH WITH THE FABRIC. BACKFILL OVER THE FABRIC IN THE TRENCH WITH THE EXCAVATED SOIL AND COMPACT. AFTER FILLING THE TRENCH, APPROXIMATELY 24" TO 36" OF SILT-FENCE FABRIC SHOULD REMAIN EXPOSED.
LAY THE EXPOSED SILT FENCE UPSLOPE OF THE TRENCH TO CLEAR AN AREA FOR DRIVING IN THE POSTS. JUST DOWNSLOPE OF THE TRENCH, DRIVE POSTS INTO THE GROUND TO A DEPTH OF AT LEAST 18".
PLACE POSTS NO MORE THAN 4' APART.
ATTACH THE SILT FENCE TO THE ANCHORED POST WITH STAPLES, WIRE, ZIP TIES, OR NAILS.

LIST OF COMMON PLACEMENT/INSTALLATION MISTAKES TO AVOID:

WHEN PRACTICABLE, DO NOT PLACE SILT FENCE SLOPE BARRIERS ACROSS CONTOURS. SLOPE BARRIERS SHOULD BE PLACED ALONG CONTOURS TO AVOID A CONCENTRATION OF FLOW. WHEN THE FLOW CONCENTRATES, IT OVERTOPS THE BARRIER AND THE SILT FENCE SLOPE BARRIER QUICKLY DETERIORATES.
DO NOT PLACE SILT-FENCE POSTS ON THE UPSLOPE SIDE OF THE SILT FENCE FABRIC. IN THIS CONFIGURATION, THE FORCE OF THE WATER IS NOT RESTRICTED BY THE POSTS, BUT ONLY BY THE STAPLES (WIRE, ZIP TIES, NAILS, ETC.). THE SILT FENCE WILL RIP AND FAIL.
DO NOT PLACE SILT FENCE SLOPE BARRIERS IN AREAS WITH SHALLOW SOILS UNDERLAIN BY ROCK. IF THE BARRIER IS NOT SUFFICIENTLY ANCHORED, IT WILL WASH OUT.
SILT FENCE SLOPE BARRIERS MUST BE DUG INTO THE GROUND-SILT FENCE AT GROUND LEVEL DOES NOT WORK BECAUSE WATER WILL FLOW UNDERNEATH.

INSPECTION AND MAINTENANCE:

SILT FENCE SLOPE BARRIERS SHOULD BE INSPECTED EVERY 7 DAYS AND WITHIN 24 HOURS OF A RAINFALL OF 1/2" OR MORE. THE FOLLOWING IS A LIST OF QUESTIONS THAT SHOULD BE ADDRESSED DURING EACH INSPECTION:

ARE THERE ANY POINTS ALONG THE SLOPE BARRIER WHERE WATER IS CONCENTRATING?
DOES WATER FLOW UNDER THE SLOPE BARRIER?
DO THE SILT FENCES SAG EXCESSIVELY?
HAS THE SILT FENCE TORN OR BECOME DETACHED FROM THE POSTS?
DOES SEDIMENT NEED TO BE REMOVED FROM BEHIND THE SLOPE BARRIER?

CITY OF WICHITA
PUBLIC WORKS & UTILITIES ENGINEERING DIVISION

SILT FENCE DITCH CHECK AND BARRIER DETAILS

CITY ENGINEER
GARY JANZEN, P.E.

PROJECT NUMBER	OCA NUMBER	DATE
472-84308	706938	11/2010

CITY ENGINEER'S OFFICE
CITY HALL - SEVENTH FLOOR
455 NORTH MAIN STREET
WICHITA, KANSAS 67202-1620
(316) 268-4501

SHEET
72

SW-502