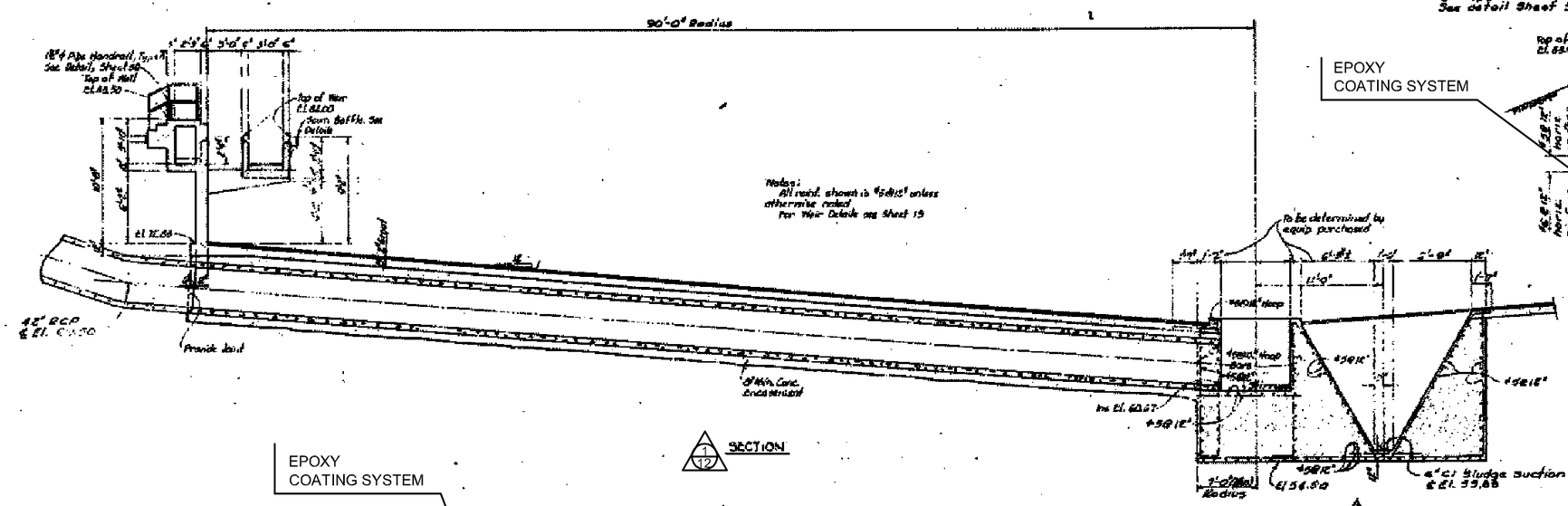

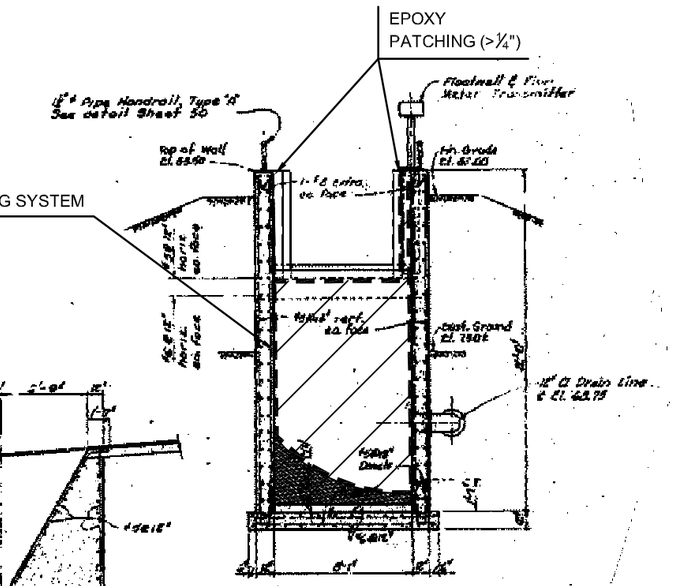

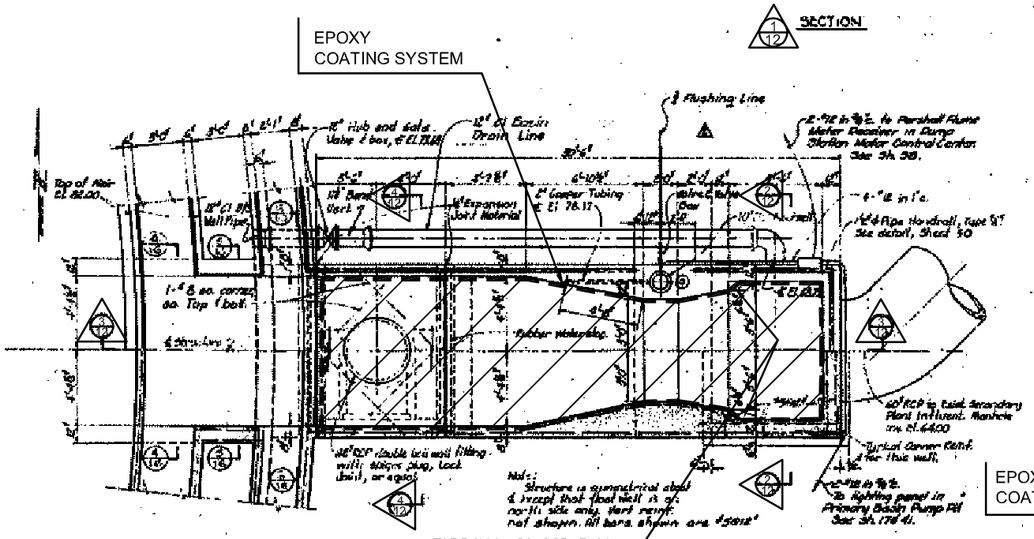

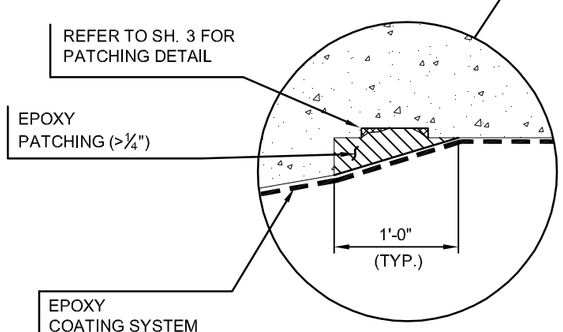

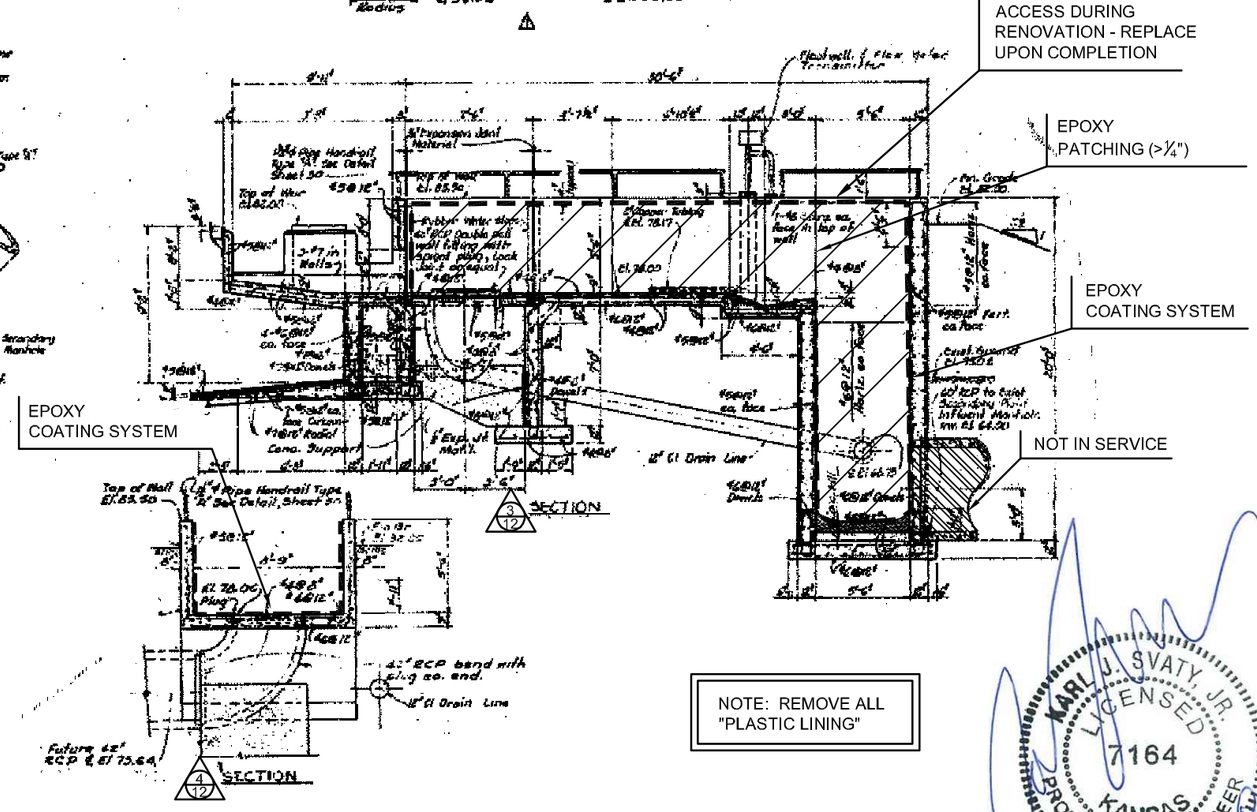

NOTE: REMOVE ALL
"PLASTIC LINING"

KARL J. SVATY, JR.
LICENSED
7164
KANSAS
PROFESSIONAL ENGINEER

MKEC
Wichita, KS · 316.684.9600

CITY OF WICHITA, KANSAS

WASTEWATER TREATMENT PLANT #2

HEADWORKS IMPROVEMENTS

©2014
MKEC Engineering
All Rights Reserved
www.mkec.com
These drawings and their contents, including, but not limited to, all concepts, designs, & ideas are the exclusive property of MKEC Engineering (MKEC), and may not be used or reproduced in any way without the express consent of MKEC.

PARSHSHALL FLUME SECTIONS

PROJECT NO.	1401010275
DATE	07/31/14
SCALE	N.T.S.

DESIGNED	DRAWN	CHECKED
KJS	DPG	KJS

NO.	REVISION	DATE
0	ISSUED FOR CONSTRUCTION	09/18/14

SHEET NO.