FHWA REG NO.	STATE	PROJECT NO.	YEAR	SHEET NO.	SHEETS
7	KANSAS	54-87 K-4445-01	1996	30	73

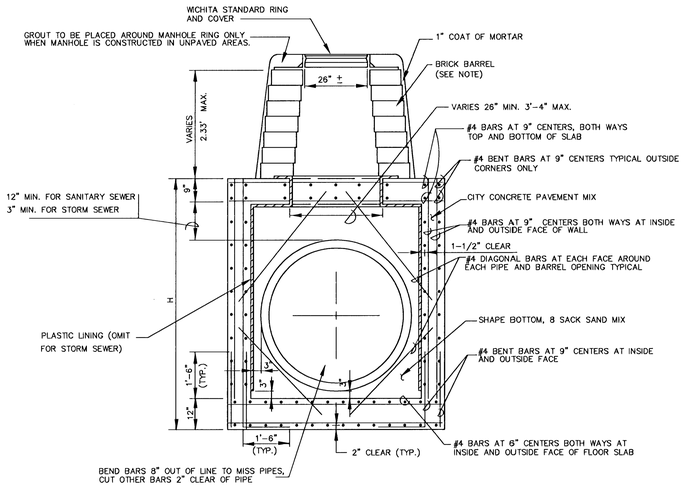

REINFORCED CONCRETE MANHOLE

DEPTH OF STACK: 0' TO 2.33'

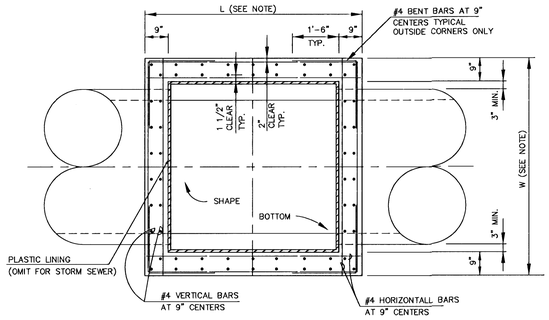

TOP VIEW

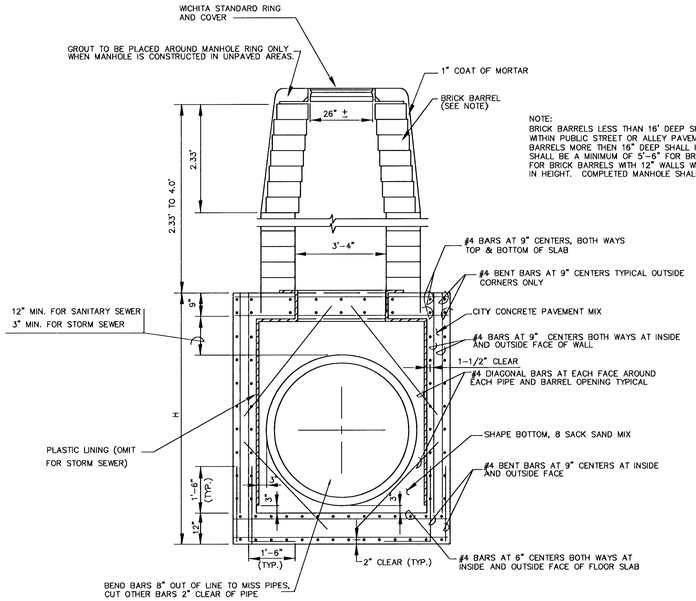

NOTE:
BRICK BARRELS LESS THAN 16' DEEP SHALL HAVE 8" WALLS EXCEPT WHEN LOCATED WITHIN PUBLIC STREET OR ALLEY PAVEMENT THEN THE WALL SHALL BE 12". BRICK BARRELS MORE THEN 16" DEEP SHALL HAVE 12" WALLS. THE "L" AND "W" DIMENSIONS SHALL BE A MINIMUM OF 5'-6" FOR BRICK BARRELS WITH 8" WALLS AND 6'-2" FOR BRICK BARRELS WITH 12" WALLS WHEN THE BRICK BARRELS ARE OVER 4 FEET IN HEIGHT. COMPLETED MANHOLE SHALL BE WITHOUT LEAKS AND WATERTIGHT.

REINFORCED CONCRETE MANHOLE

DEPTH OF STACK: 2.33' TO 4.0'

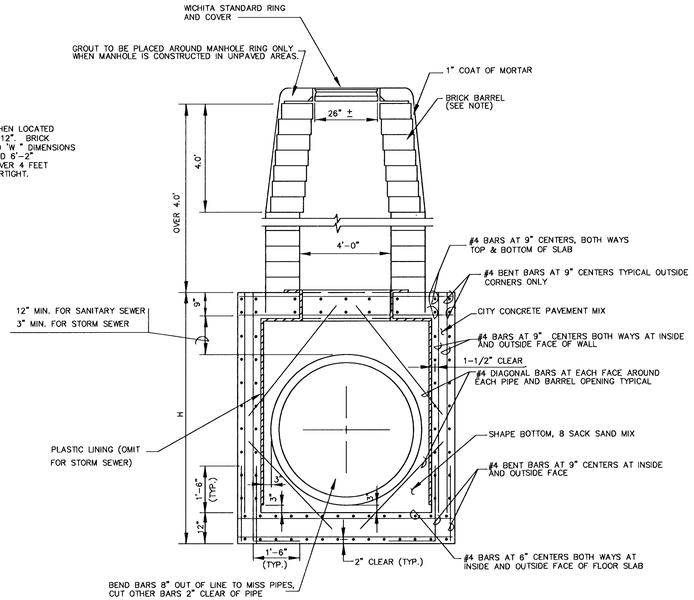

REINFORCED CONCRETE MANHOLE

DEPTH OF STACK: OVER 4.0'

NO.	DATE	REVISIONS	BY	APP'D
3				
2				
1				

CITY OF WICHITA

STANDARD DETAILS
REINFORCED CONCRETE
MANHOLES

SHEET NO.	OF	SCALE		APP'D			
DESIGNED	COW	DETAILED	COW	QUANTITIES	COW	TRACED	COW
DESIGN CK.	COW	DETAIL CK.	COW	QUAN.CK.	COW	TRACE CK.	COW

KOSWS\REINFMH 5-31-96