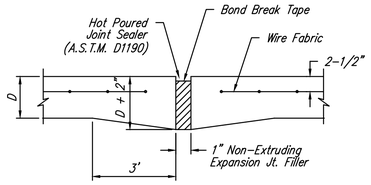

EXPANSION JOINT (E.J.)

NOTE: Extra Thickness to be Subsidiary to Price of Square Yards Pavement

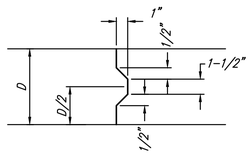

KEYWAY DETAIL

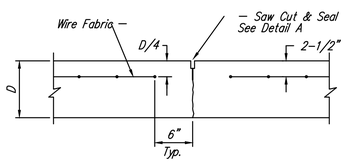

CONTRACTION JOINT DETAIL (C.J.)

LONGITUDINAL JOINT DETAIL (L.J.) "A"

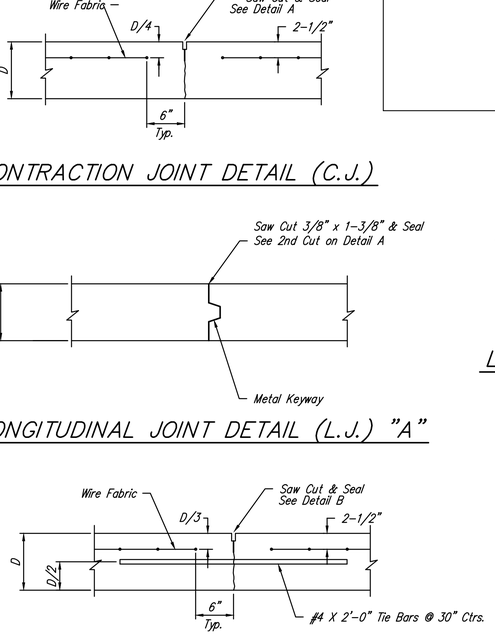

LONGITUDINAL JOINT DETAIL (L.J.)

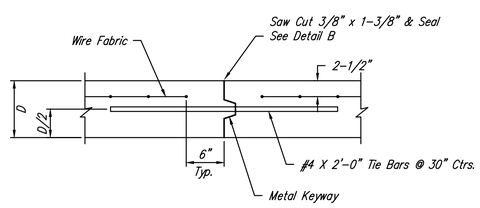

OPTIONAL LONGITUDINAL JOINT DETAIL (L.J.)
(CONSTRUCTION JOINT)

STANDARD WHEELCHAIR RAMP
CONSTRUCTION DETAIL FOR STREETS
WITH COMBINED CURB & GUTTER
(TYPE A)

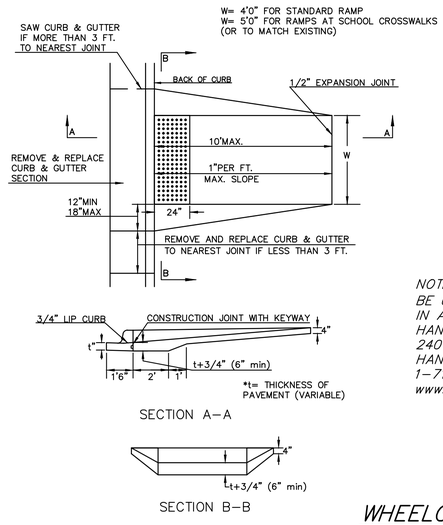

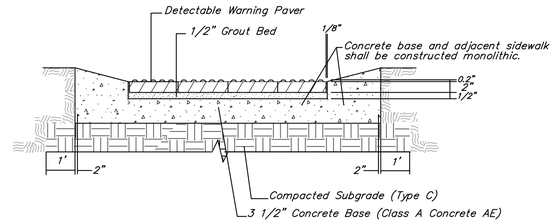

TYPICAL SECTION DETECTABLE WARNING PAVER
SECTION A-A

NOTE: HANOVER DETECTABLE WARNING PAVERS (OR AN APPROVED ALTERNATE) SHALL BE USED IN ALL WHEELCHAIR RAMPS. THE 11 3/4" 'RED 15' PAVER SHALL BE USED IN ALL APPLICATIONS.
HANOVER ARCHITECTURAL PRODUCTS
240 BENDER ROAD
HANOVER, PA 17331
1-717-637-0500
www.hanoverpavers.com

DOME DETAIL

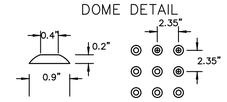

WHEELCHAIR RAMP DETAIL

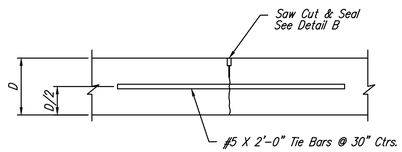

LONGITUDINAL JOINT DETAIL (L.J.) "B"

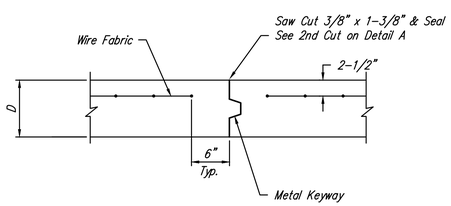

OPTIONAL CONTRACTION JOINT
(CONSTRUCTION JOINT)

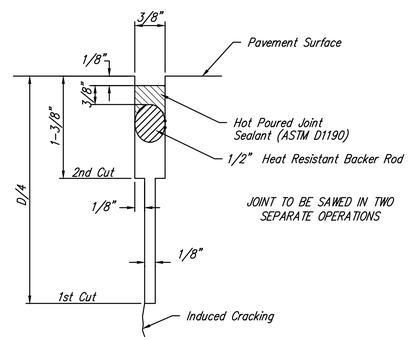

SAW JOINT DETAIL

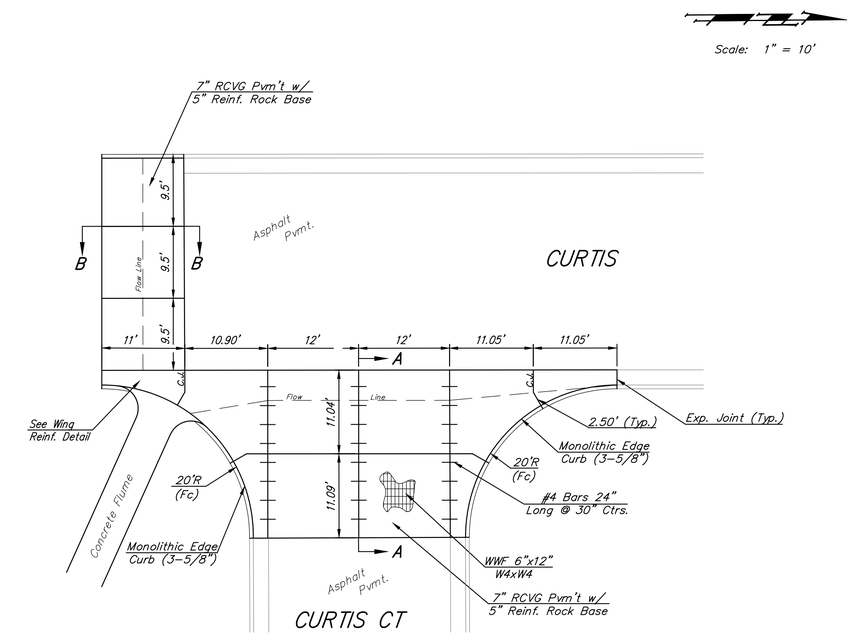

6" x 12" W4XW4 WIRE FABRIC REINFORCING SHALL BE PLACED SUCH THAT THE WIRES WITH THE 6" SPACING WILL RUN PARALLEL WITH THE LONGITUDINAL JOINT.

REINFORCED VALLEY GUTTER DETAIL

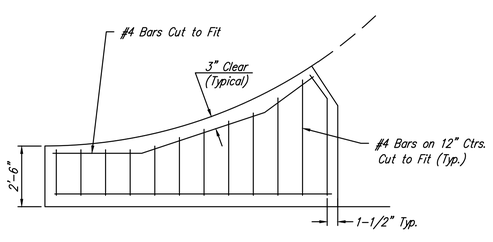

WING REINFORCING DETAIL

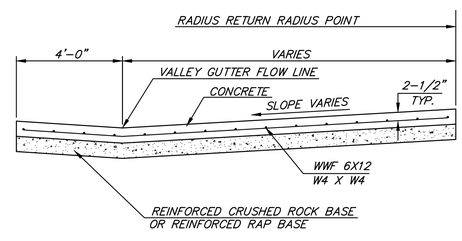

SECTION A-A

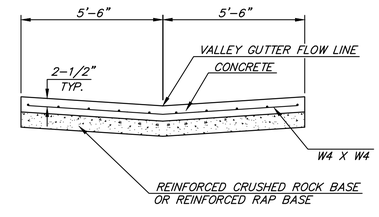

SECTION B-B

Baughman

JBAR ADDITION
VALLEY GUTTER DETAILS
WHEELCHAIR RAMP DETAILS

Baughman Company, P.A. 315 Ellis St. Wichita, KS 67211 P 316-262-7271 F 316-262-0149
ENGINEERING | SURVEYING | PLANNING | LANDSCAPE ARCHITECTURE

PROJECT NUMBER	DESIGN	DRAWN
472-85211	AEG	JAK
REVISIONS:	APPROVED	DATE 8/14
	SCALE 1" = 20'	
	SHEET 6 OF 20	

E:\Projects\JBAR Addition_14-06-F052\Engineering\Phase 1\Str_14-12-E191\STR Details.dwg