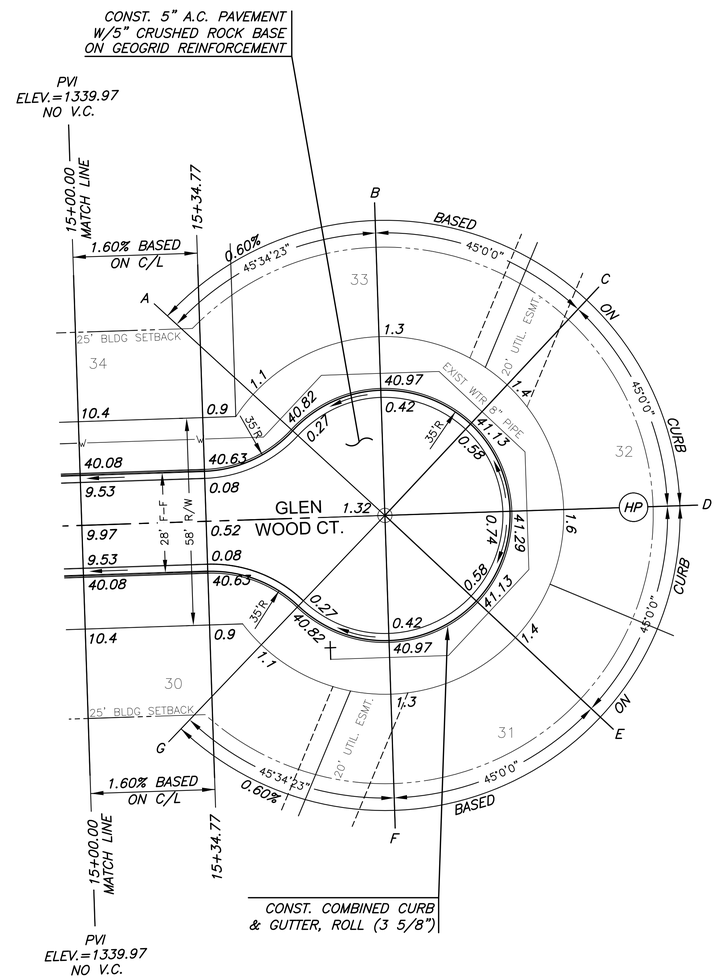

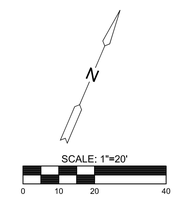

LEGEND

STREET SIGN & SIGN LOCATION (SEE SIGN ASSEMBLY TABLE FOR TYPE & STATION OF SIGN)

NOTE:
TOP OF CURB ELEVATIONS SHOWN ARE FOR FULL CURB. CONSTRUCT CURB AND GUTTER AS NOTED.

MKEC
Wichita, KS • 316-684-9600

PAVING PLANS FOR
COUNTRY HOLLOW ADDITION
PHASE 3A

©2015
MKEC Engineering
All Rights Reserved
www.mkec.com
These drawings and their contents, including, but not limited to, all concepts, designs, & ideas are the exclusive property of MKEC Engineering (MKEC), and may not be used or reproduced in any way without the express consent of MKEC.

GLEN WOOD CT.
PAVING PLAN

PROJECT NO.	472-85226
DATE	JULY 2015
SCALE	1"=20'

DESIGNED	DRAWN	CHECKED
DFL	BKS	GJA

NO.	REVISION	DATE
#	-----	##/##/####

SHEET NO.
7 OF 22

PLOTTED: Wednesday, July 29, 2015 @ 09:25AM
J:\CIVIL\044429\04429 CAD\SHTS\05 CIVIL\PAV\PHG_04429_E1.DWG