FHWA REG NO.	STATE	PROJECT NO.	YEAR	SHEET NO.	SHEETS
7	KANSAS	87 TE-0817-01	2014		

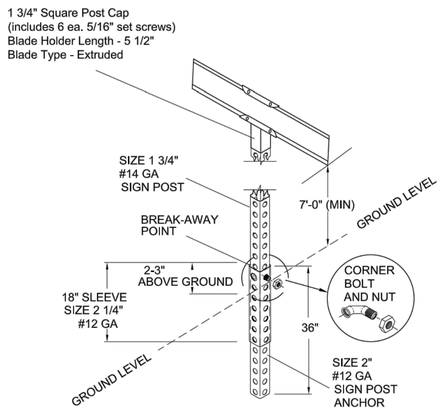

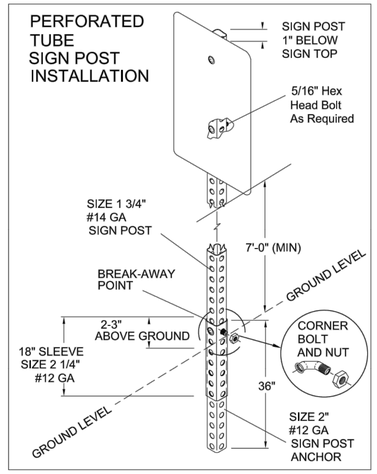

TYPICAL TRAFFIC CONTROL AND STREET NAME SIGN MOUNTING INSTALLATION

CURB AND GUTTER SECTION

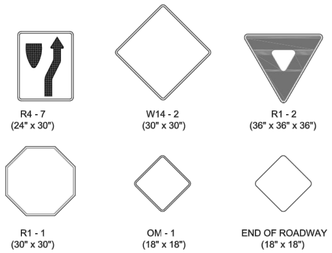

* IN NO CASE SHALL THE SPECIFICATIONS BE LESS THAN REQUIRED BY THE CURRENT MUTCD.

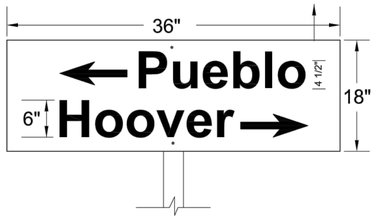

FLAT PLATE STREET NAME SIGN

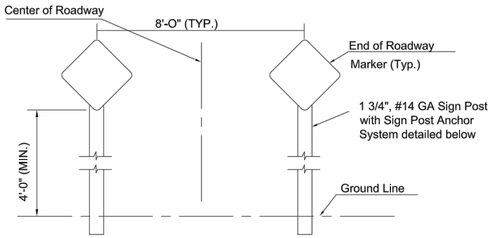

TYPICAL END OF ROADWAY SIGN MOUNTING INSTALLATION

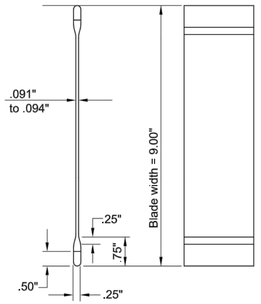

STREET NAME SIGN

BLADE DETAILS

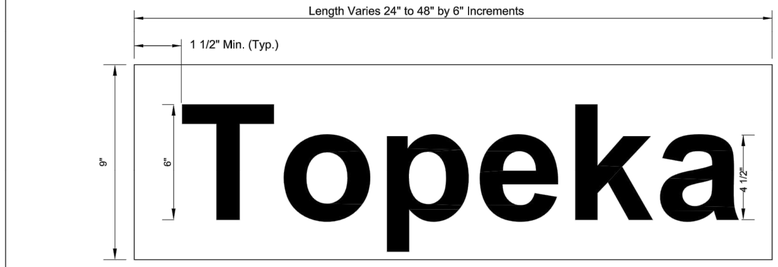

DETAIL A
9" STANDARD

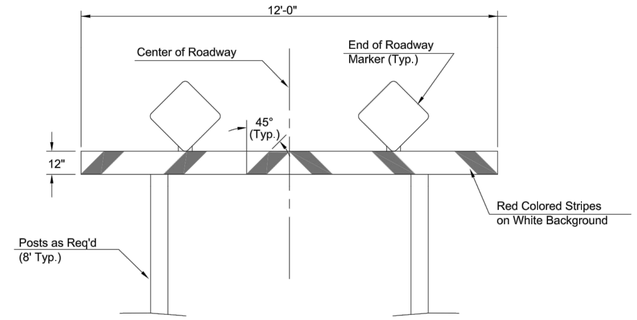

TYPE I BARRICADE DETAIL W/ E.O.R. MARKERS

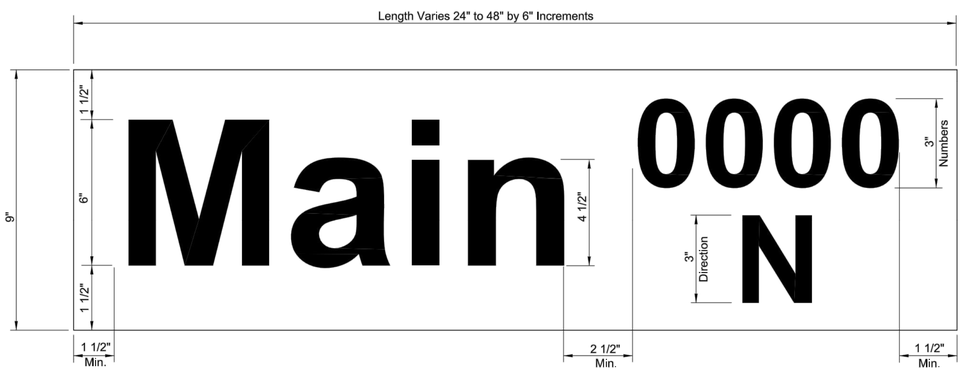

DETAIL B
9" METRO

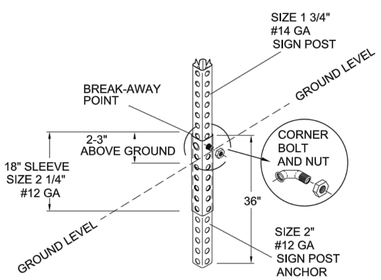

SIGN POST ANCHOR SYSTEM

SIGN ASSEMBLY TABLE

STATION	OFFSET	SIGN	QUANTITY*