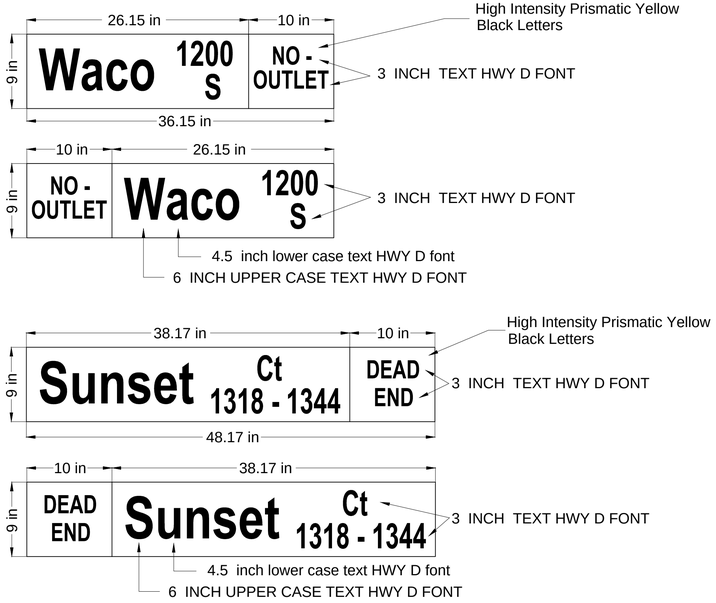


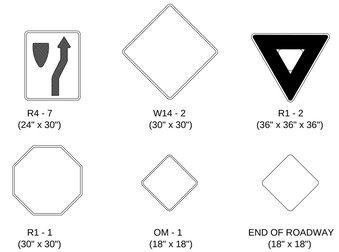


* IN NO CASE SHALL THE SPECIFICATIONS BE LESS THAN REQUIRED BY THE CURRENT MUTCD.

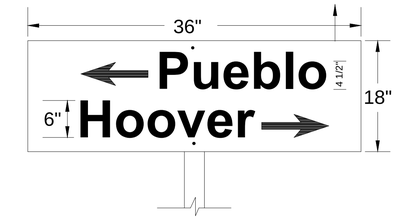


FLAT PLATE STREET NAME SIGN

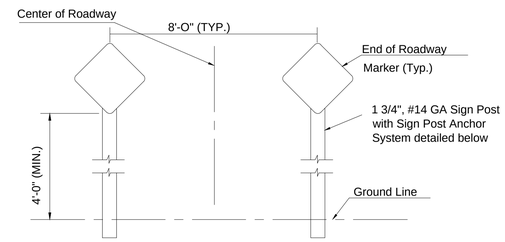


TYPICAL END OF ROADWAY SIGN MOUNTING INSTALLATION

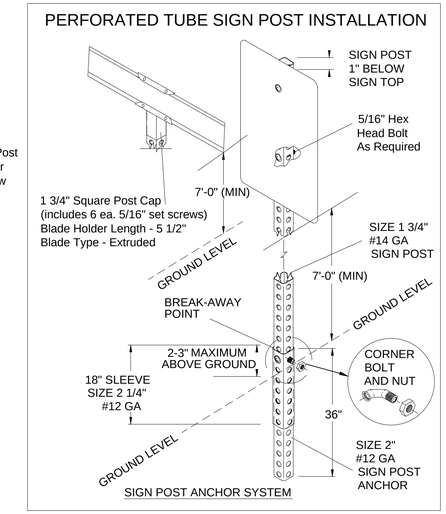


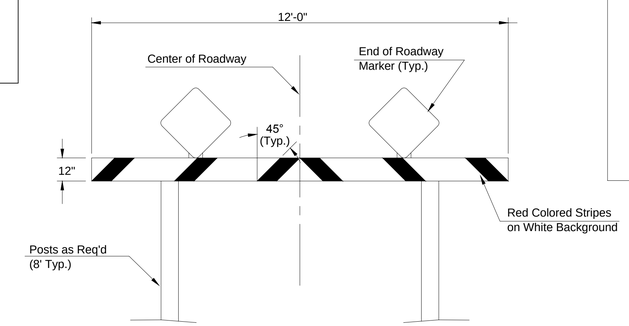


TYPE I BARRICADE DETAIL W/ E.O.R. MARKERS

## SIGN ASSEMBLY TABLE

| STATION | OFFSET | SIGN | QUANTITY* |
|---|---|---|---|
| 0+25 | 28' Rt. | SNS | 1 |
| 3+40.91 | 0' | R4-7 | 1 |
| 3+40.91 | 0' | OM1-3 | 1 |
| | | | |
| | | | |
| | | |