FHWA REGION NO.	STATE	PROJECT NO.	FISCAL YEAR	SHEET NO.	TOTAL SHEETS
7	KANSAS	87-N-0335-01	2002	8	47

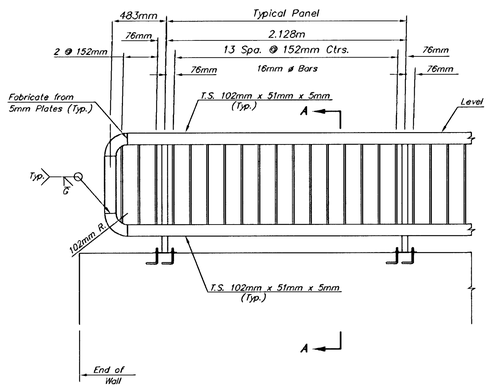

HANDRAIL DETAIL

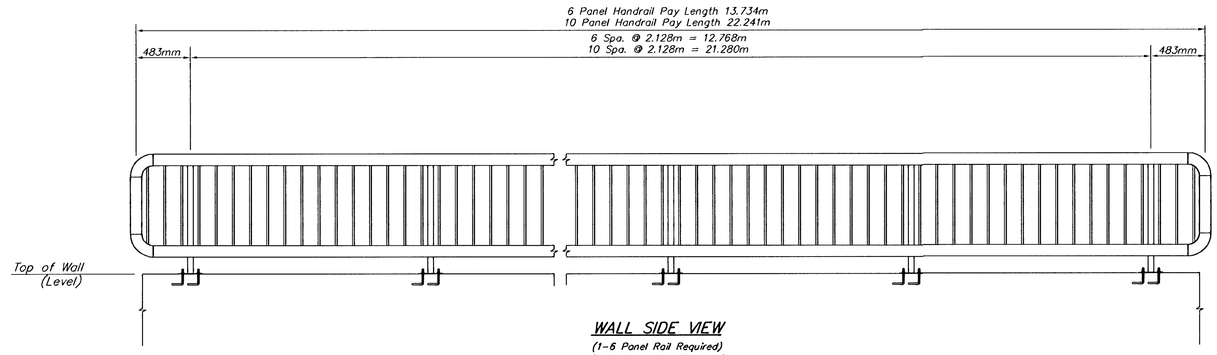

WALL SIDE VIEW
(1-6 Panel Rail Required)
(1-10 Panel Rail Required)

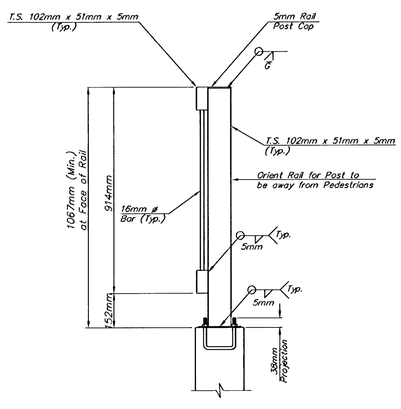

SECTION A-A

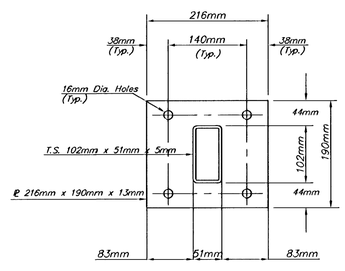

BASE PLATE
18 Required

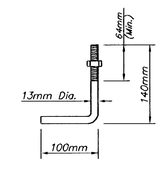

Galvanized (ATSM A153)
(May Substitute expandable anchor bolts when approved by the Engineer)

ANCHOR BOLT

Orient to provide min. 51mm edge clearance to either wall face or adjacent bolts)

GENERAL NOTES

The horizontal members of the rail and posts shall be hollow structural tubing. All structural steel and tubing shall comply to A.S.T.M. Designation A36 or A500 Grade B respectively.

Rail shall be fabricated in lengths as shown.

Posts and bars shall be set vertical and shimmed if required.

The handrail shall be painted shop and field with an inorganic zinc-vinyl paint system complying with the Standard Specifications for State Road and Bridge Construction, 1990 Edition Kansas Department of Transportation.

Material and construction shall conform to the Structural Welding Code A.W.S. D1.1-88.

Shop details must be submitted and approved by the Engineer.

KDOT METRIC

PROJECT NUMBER	SHEET NAME	ENGINEERING DIRECTORY
472-83799	Handrail	F:\Eng\LinMcln\Details

DESIGN	DRAWN	APPROVED	DATE	SCALE	BAUGHMAN NO
TCA	TCA	JFB	July 2003	None	01 03 E944

CAPITAL IMPROVEMENT PROJECT
HANDRAIL DETAIL
LINCOLN AND MCLEAN INTERSECTION IMPROVEMENTS

BAUGHMAN COMPANY, P.A.
ENGINEERING, SURVEYING, & PLANNING
316-262-7271 • 315 ELLIS • WICHITA, KANSAS 67211