FHWA REGION NO.	STATE	PROJECT NO.	FISCAL YEAR	SHEET NO.	TOTAL SHEETS
7	KANSAS	87-N-0223-01	2002	26	47

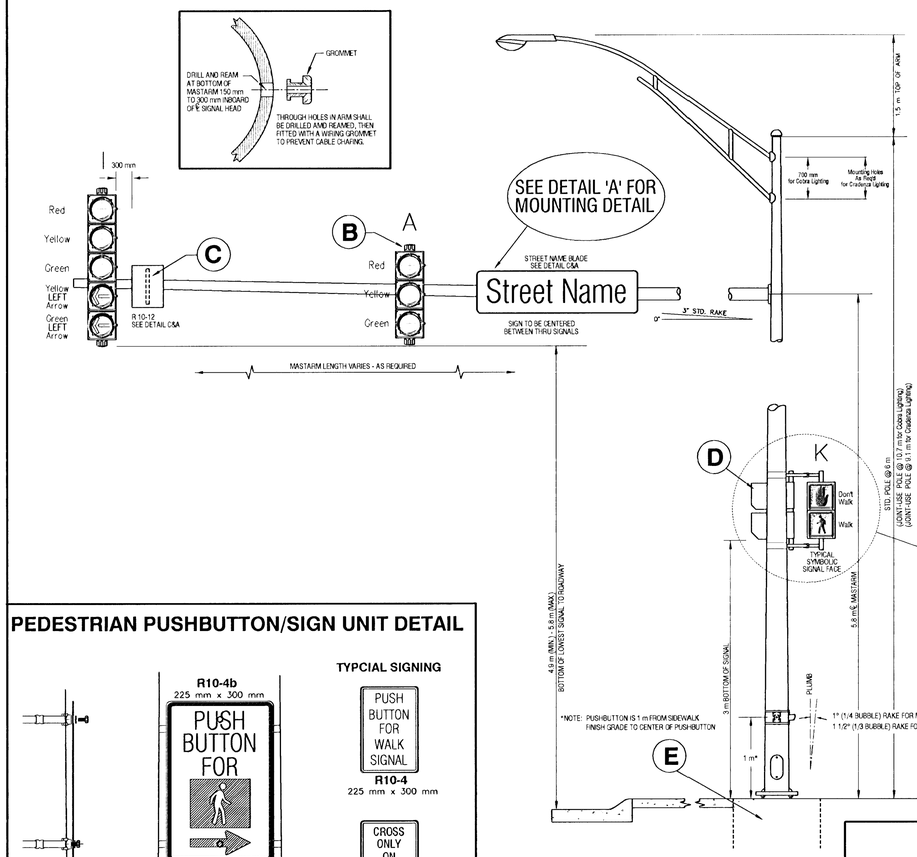

DETAIL 'D'

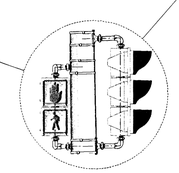

BANDED SIGN MOUNTING BRACKET DETAIL

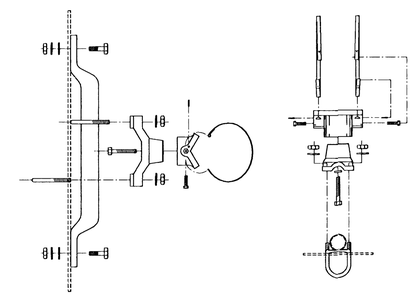

A

TYPE I SIGNAL MOUNTING BRACKET ASSEMBLY DETAIL

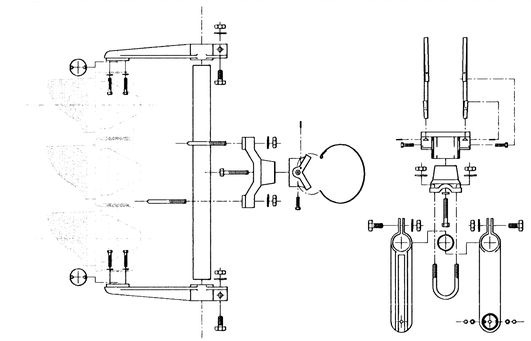

B

COMBINATION TYPE II &TYPE III SIGNAL MTG BKT ASSY (SIDE-OF-POLE)

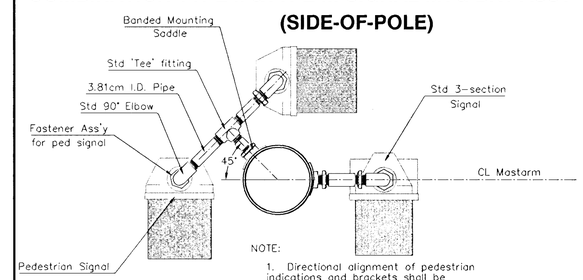

NOTE:

1. Directional alignment of pedestrian indications and brackets shall be determined in the field by the engineer.
2. Through holes in the pole shall be drilled and well reamed to prevent cable chafing.

D

PEDESTRIAN PUSHBUTTON/SIGN UNIT DETAIL

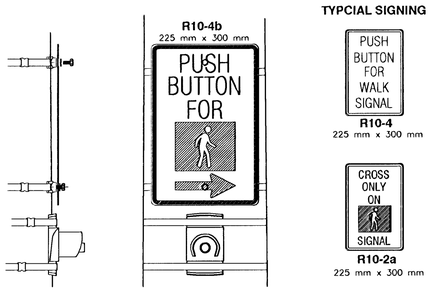

INSTALL PEDESTRIAN PUSHBUTTON UNDERNEATH CORRESPONDING PEDESTRIAN SIGNAL HEAD ON SIDE OF POLE NEAREST CROSSWALK.

STANDARD SIGNING

C

TYPE III SIDE-OF-POLE MOUNTING BRACKET ASSEMBLY

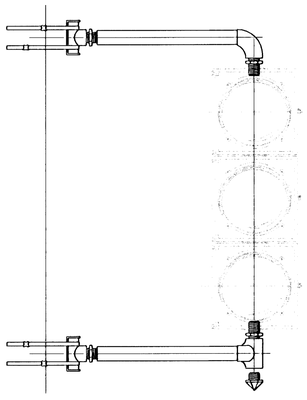

F

REINFORCED CONCRETE POLE BASE

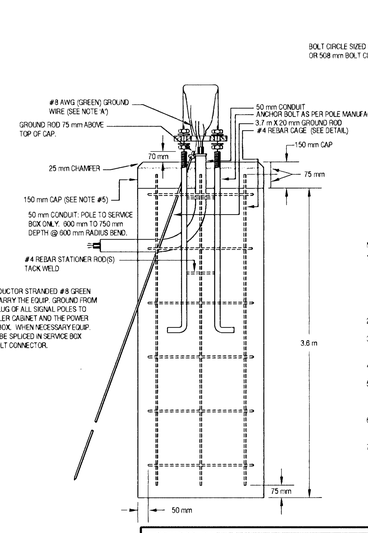

NOTE: A

A SINGLE CONDUCTOR STRANDED #8 GREEN WIRE SHALL CARRY THE EQUIP. GROUND FROM THE GROUND LUG OF ALL SIGNAL POLES TO THE CONTROLLER CABINET AND THE POWER DISCONNECT BOX. WHEN NECESSARY EQUIP. GROUND CAN BE SPLICED IN SERVICE BOX WITH SPLIT BOLT CONNECTOR.

REBAR CAGE

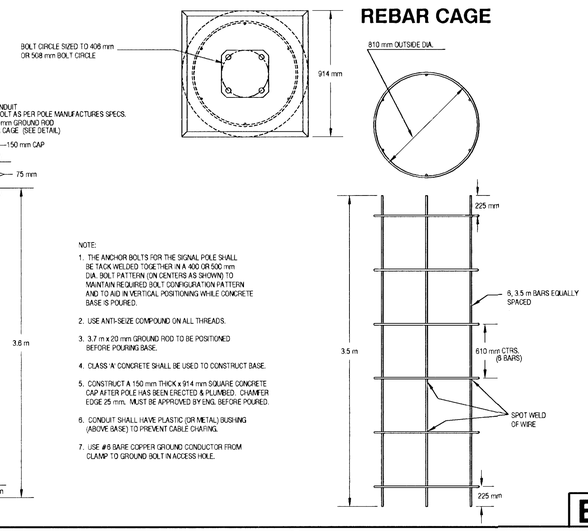

NOTE:

1. THE ANCHOR BOLTS FOR THE SIGNAL POLE SHALL BE TACK WELDED TOGETHER IN A 400 OR 500 mm DIA. BOLT PATTERN (ON CENTERS AS SHOWN) TO MAINTAIN REQUIRED BOLT CONFIGURATION PATTERN AND TO AID IN VERTICAL POSITIONING WHILE CONCRETE BASE IS POURED.
2. USE ANTI-SEIZE COMPOUND ON ALL THREADS.
3. 3.7 m x 20 mm GROUND ROD TO BE POSITIONED BEFORE POURING BASE.
4. CLASS 'A' CONCRETE SHALL BE USED TO CONSTRUCT BASE.
5. CONSTRUCT A 150 mm THICK x 914 mm SQUARE CONCRETE CAP AFTER POLE HAS BEEN ERECTED & PLUMBED. CHAMFER EDGE 25 mm. MUST BE APPROVED BY ENG. BEFORE POURED.
6. CONDUIT SHALL HAVE PLASTIC (OR METAL) BUSHING (ABOVE BASE) TO PREVENT CABLE CHAFING.
7. USE #6 BARE COPPER GROUND CONDUCTOR FROM CLAMP TO GROUND BOLT IN ACCESS HOLE.

E

TYPE II SIGNAL MOUNTING BRACKET ASSEMBLY (SIDE-OF-POLE)

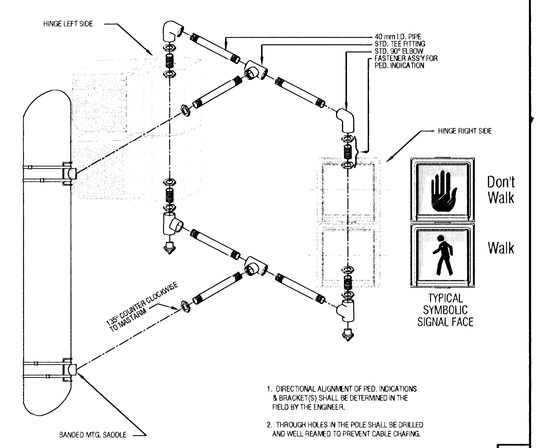

1. DIRECTIONAL ALIGNMENT OF PED. INDICATIONS & BRACKET(S) SHALL BE DETERMINED IN THE FIELD BY THE ENGINEER.
2. THROUGH HOLES IN THE POLE SHALL BE DRILLED AND WELL REAMED TO PREVENT CABLE CHAFING.
3. HINGE PEDESTRIAN SIGNAL DOORS AWAY FROM POLE.

D

PROJECT NUMBER	SHEET NAME	ENGINEERING DIRECTORY
472-83799	PPSP1-M	F:\\LinMcIn\Traff

DESIGN	DRAWN	APPROVED	DATE	SCALE	BAUGHMAN NO
	STAFF	JFB	July 2003	None	01-03-E944

CAPITAL IMPROVEMENT PROJECT

SIGNAL POLE DETAILS

LINCOLN AND MCLEAN INTERSECTION IMPROVEMENTS

BAUGHMAN COMPANY, P.A.
ENGINEERING, SURVEYING, & PLANNING
316-262-7271 • 315 ELLIS • WICHITA, KANSAS 67211