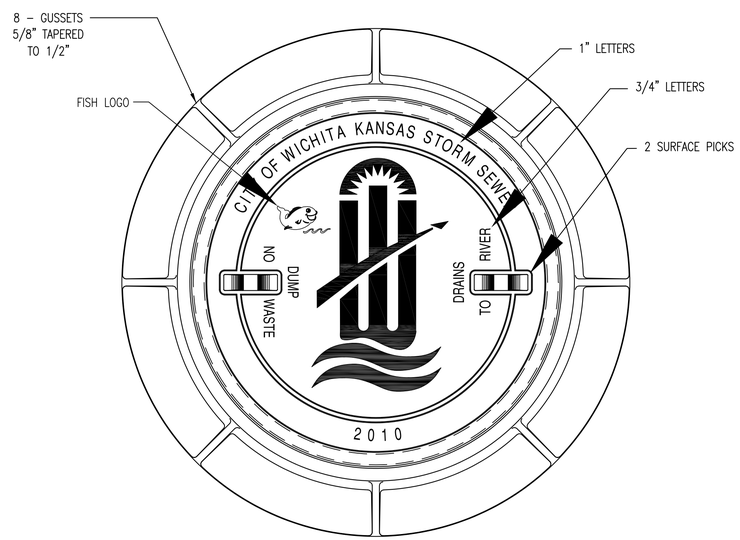

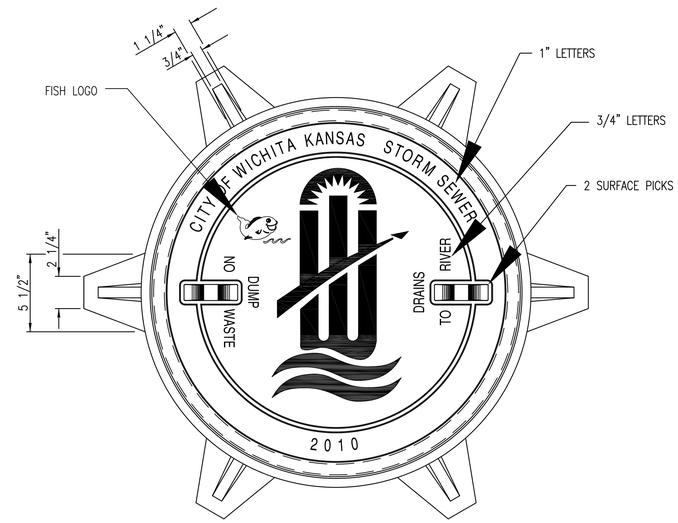

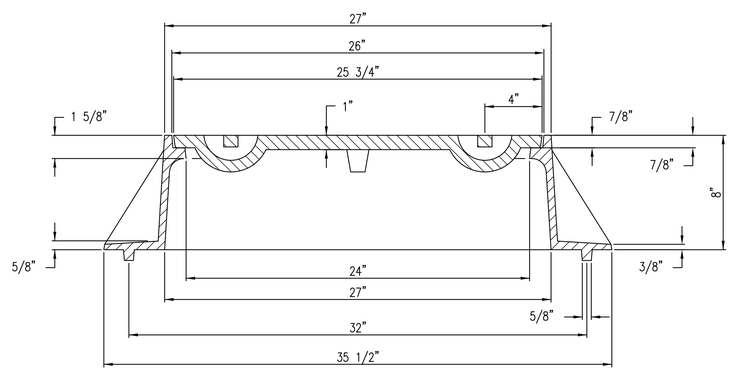

MANHOLE FRAME

DEETER #1261 OR EJIW #1936-Z1

NOTE:
1. FURNISHED WITH MACHINED HORIZONTAL BEARING SURFACE.
2. COVER TO BE DEETER #1261 OR EJIW #1936A.

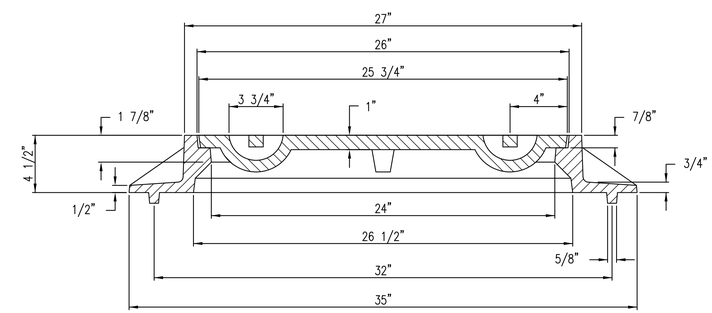

INLET FRAME

DEETER #2014 OR EJIW #1936-Z4

NOTE:
1. FURNISHED WITH MACHINED HORIZONTAL BEARING SURFACES.
2. NOT TO BE USED UNDER PAVEMENT.
3. COVER TO BE DEETER #1261 OR EJIW #1936A.

CITY OF WICHITA
PUBLIC WORKS & UTILITIES
ENGINEERING DIVISION

MANHOLE/INLET FRAME AND COVER (STORM SEWER)

CITY ENGINEER
GARY L. JANZEN, P.E.

PROJECT NUMBER	OCA NUMBER	DATE
468-85068	751539	11/2010

CITY ENGINEER'S OFFICE
CITY HALL - SEVENTH FLOOR
455 NORTH MAIN STREET
WICHITA, KANSAS 67202-1620
(316) 268-4501

SHEET
3 OF 16

SW-303

J:\Projects\2014\1401010462_Premier_Estancia\05-Civil\CAD\Sws\COMMERCIAL\14462-COM_DD2.dwg

Saved 11-12-2015 8:39:48 AM by LIDGETTK
Plot Scale 1:1 11-18-2015 2:19:52 PM by KAREN LIDGETT
J:\Projects\2014\1401010462_Premier_Estancia\05-Civil\CAD\Sws\COMMERCIAL\14462-COM_DD2