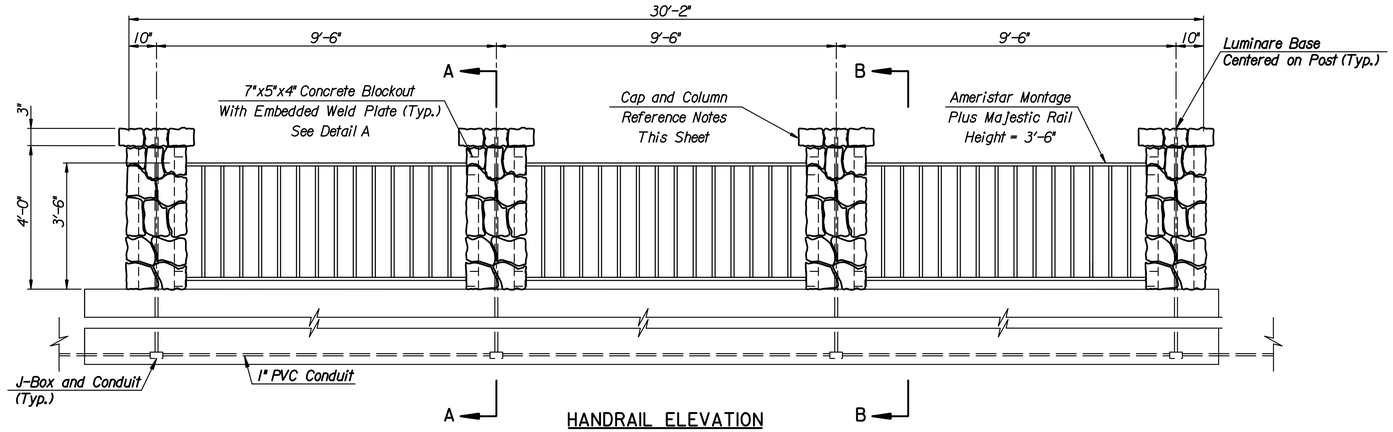

HANDRAIL ELEVATION

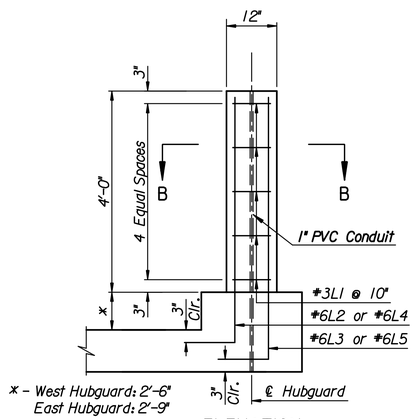

ELEVATION

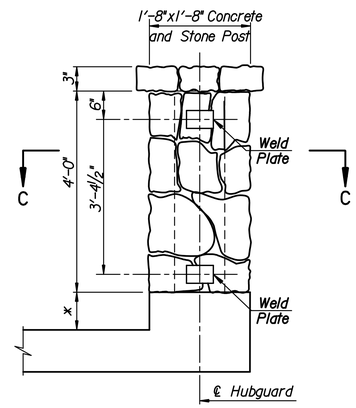

VIEW B-B

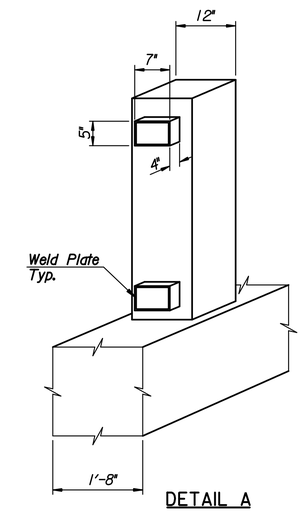

DETAIL A

Concrete Blockout

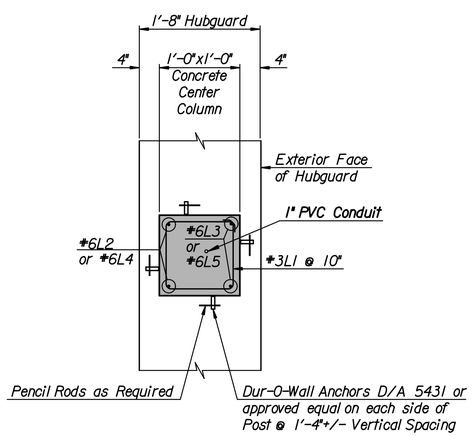

SECTION C-C

Post Column Concrete & Reinforcing Steel is included in R.C.B. Quantities. Post Column Reinforcing detailed for 4" Stone.

Stone not shown for clarity.

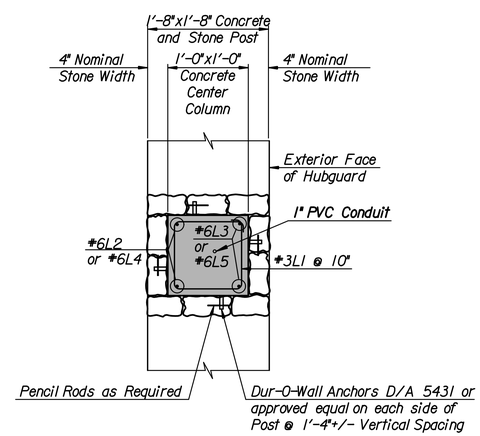

SECTION C-C

Post Column Concrete & Reinforcing Steel is included in R.C.B. Quantities. Post Column Reinforcing detailed for 4" Stone.

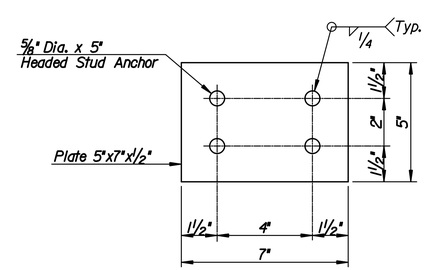

WELD PLATE

(24 Required)

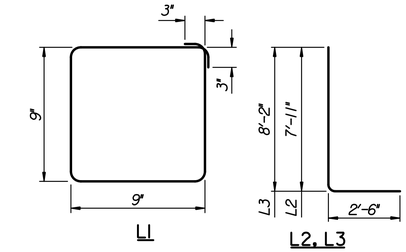

BENDING DIAGRAMS

East Hubguard

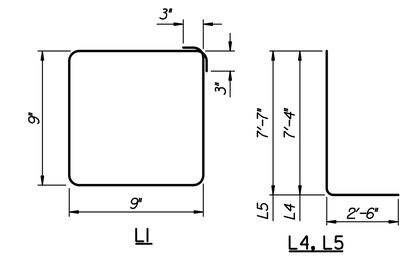

BENDING DIAGRAMS

West Hubguard

CAP AND COLUMN NOTES

Stone Veneer
Manufacturer: Sunset Stone
Type: Cobble Stone
Color: Brown
Submittal: Provide a color sample for verification. For reference, the stone is to match the existing Oxford Grand Building stone at 3051 N. Parkdale.

Cap
Manufacturer: Sunset Stone
Type: Post Cap Flat
Color: Brown
Size: 24"x24"x2" thickness

Note: Core column cap as necessary for light pole installation.

No.	Revision	By	Date

NEWMARKET OFFICE 2ND-PHASE 2
PAVING AND INCIDENTAL DRAINAGE IMPROVEMENTS

PEDESTRIAN RAIL DETAILS

GARY JANZEN, P.E.- CITY ENGINEER
CITY OF WICHITA PROJECT NO. 472-84991

REGISTERED PROFESSIONAL ENGINEER
11/02/2015
CHARLES W. LEE
23458
KANSAS

PEC
PROFESSIONAL ENGINEERING CONSULTANTS, P.A.
303 SOUTH TOPEKA WICHITA, KS 67202
316-262-2691 www.pec1.com

Designed by MLB	Job No. 35-15120-001	Sht. 34 of 36
Drawn by MLB	Date November 2015	

U:Wichita-Civil/2015/15120/001/Trans/Bridge/DGN_Project/15120-001 Rail Details.dgn