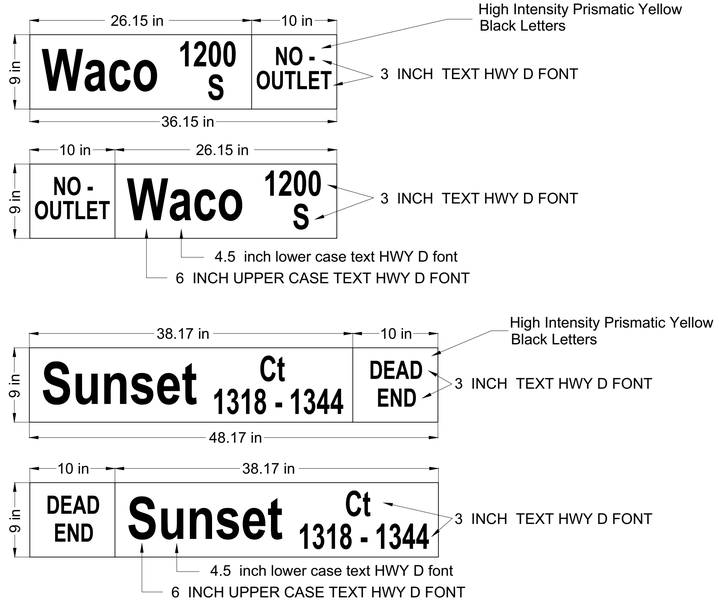

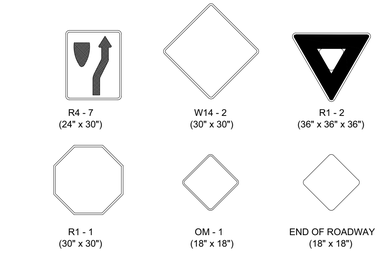

* IN NO CASE SHALL THE SPECIFICATIONS BE LESS THAN REQUIRED BY THE CURRENT MUTCD.

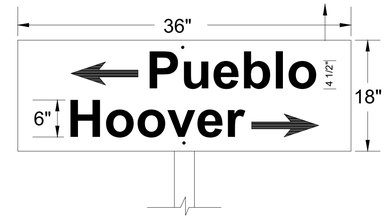

FLAT PLATE STREET NAME SIGN

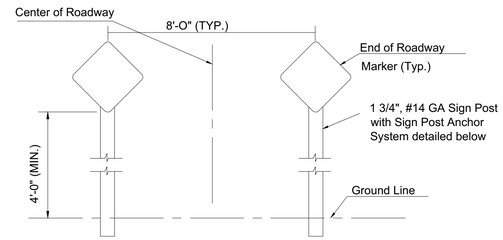

TYPICAL END OF ROADWAY SIGN MOUNTING INSTALLATION

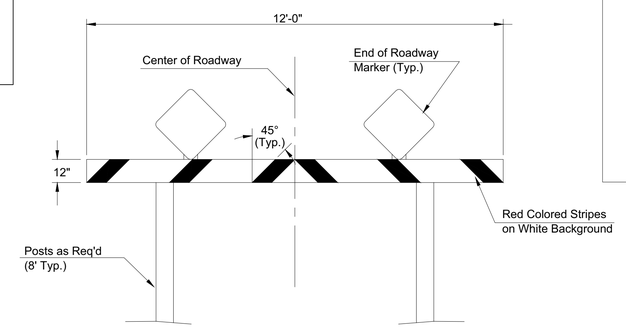

TYPE I BARRICADE DETAIL W/ E.O.R. MARKERS

PERFORATED TUBE SIGN POST INSTALLATION

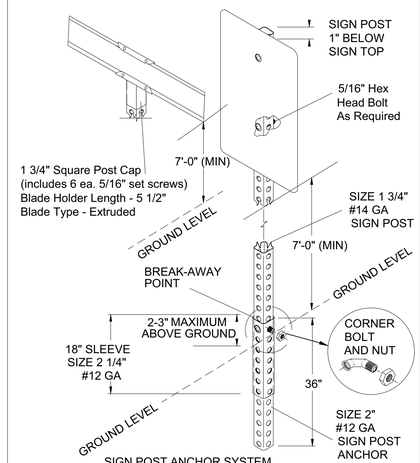

SIGN POST ANCHOR SYSTEM

DETAIL A
9" STANDARD

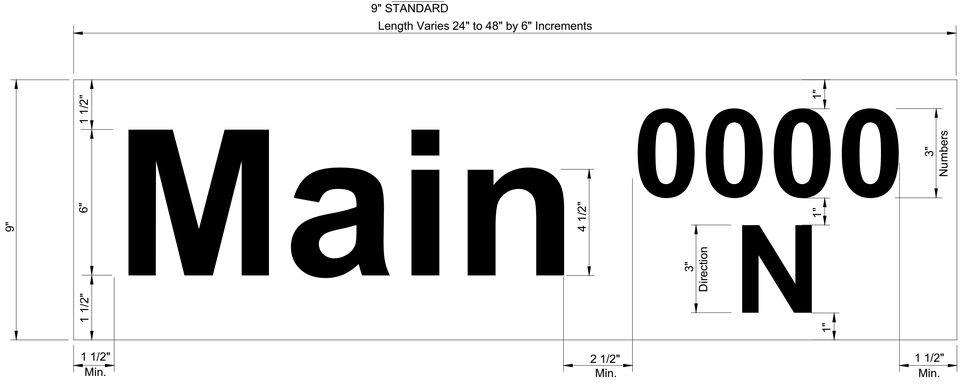

DETAIL B
9" METRO

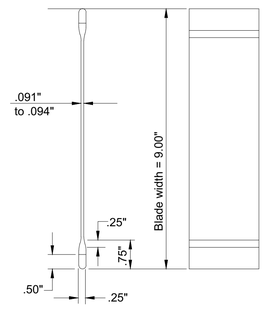

STREET NAME SIGN
BLADE DETAILS

SIGN ASSEMBLY TABLE

STATION	OFFSET	SIGN	QUANTITY*
0+28	18' Rt.	SNS	1