PLOTTED: Thursday, April 28, 2016 @ 07:51AM

J:\PROJECTS\2015\1501\0808_LAHAM_CORNERSTONE 2ND OFFICE ADD_15608 CAD\SHTS\05 CIVIL\WTR\15608_CT.DWG

WATER DISTRIBUTION SYSTEM IMPROVEMENTS

TO SERVE

# CORNERSTONE OFFICE SECOND

THE CITY OF ANDOVER, KANSAS

CITY OF WICHITA PROJECT NO. 1961 PPW

OCA 607853

## AS-BUILT PLANS - APRIL 2016

INSPECTED BY: GENE RATH, MKEC ENGINEERING INC
CONSTRUCTED BY: MIES CONSTRUCTION
SUPERINTENDENT: DOUG GOSSER
SUPPLIER: WICHITA WINWATER

| | | | | | |
|---|---|---|---|---|---|
| 8"x8" TEE: | 1 | 8" ANCHOR VALVE (CLOW): | 1 | 8" C900 PVC: | 831 LF |
| 8" 90° BEND: | 2 | 12"x8" TAPPING SLEEVE & VALVE: | 1 | | |
| 8" 22.5° BEND: | 6 | FIRE HYDRANT (CLOW): | 2 | | |
| 8" 11.25° BEND: | 1 | | | | |

## GENERAL NOTES

1. THE CONTRACTOR SHALL COMPLY WITH ALL APPLICABLE SAFETY REGULATIONS. ALL CONSTRUCTION SHALL BE COMPLETED FOLLOWING CURRENT CITY STANDARD SPECIFICATIONS AND SPECIAL PROVISIONS.
2. THE CONTRACTOR WILL BE REQUIRED TO PROVIDE NOTICE TO UTILITY COMPANIES A MINIMUM OF SEVENTY-TWO (72) HOURS PRIOR TO ANY EXCAVATION, AS FOLLOWS:

   KANSAS ONE-CALL 687-2470

   THE CONTRACTOR MUST NOTIFY THE FOLLOWING IN CASE OF AN EMERGENCY:

   | | |
   |---|---|
   | AT&T | 1-800-246-8464 |
   | BLACK HILLS ENERGY (GAS) | 1-800-694-8989 |
   | CITY OF WICHITA WATER | 1-316-268-4555 |
   | CITY OF WICHITA SEWER | 1-316-268-4073 |
   | CITY OF WICHITA STORMWATER | 1-316-268-4090 |
   | CITY OF WICHITA TRAFFIC | 1-316-268-4034 |
   | COX COMMUNICATIONS | 1-888-249-3530 |
   | KANSAS GAS SERVICE | 1-888-482-4950 |
   | WESTAR ENERGY | 1-800-544-4857 |

3. UTILITY SERVICE LINES, POLES, ETC., ARE TO BE ADJUSTED AS NECESSARY BY OTHERS PRIOR TO CONSTRUCTION UNLESS THE PLANS SPECIFICALLY CALL FOR THEIR ADJUSTMENT BY ITS OWNER DURING CONSTRUCTION. EXISTING UTILITIES AND THEIR LOCATION, AS SHOWN ON THE PLAN, REPRESENT THE BEST INFORMATION OBTAINABLE FOR DESIGN. THE CONTRACTOR WILL BE REQUIRED TO WORK AROUND EXISTING UTILITIES WITHIN THE RIGHT-OF-WAY WHICH DO NOT CONFLICT WITH PROPOSED CONSTRUCTION.
4. RUBBLE FROM THE REMOVAL OF MISCELLANEOUS STRUCTURES AND EXCESS EXCAVATION WHICH IS TO BE WASTED SHALL BE DISPOSED OF ON SITES TO BE PROVIDED BY THE CONTRACTOR. THESE SITES SHALL BE APPROVED BY THE ENGINEER AS TO SUITABILITY, APPEARANCE AND SITE LOCATION, LOCATIONS, IN THE OPINION OF THE ENGINEER, THAT WILL LEAVE AN UNSIGHTLY APPEARANCE WILL NOT BE APPROVED. ALL DISPOSAL SITES MUST BE APPROVED BY THE KANSAS DEPARTMENT OF HEALTH AND ENVIRONMENT. MATERIAL EITHER STOCKPILED OR DISPOSED OF IN A FLOOD PLAIN WOULD REQUIRE A KANSAS STATE BOARD OF AGRICULTURE PERMIT. ANY MATERIAL DUMPED IN WATERS OF THE UNITED STATES OR WETLANDS IS SUBJECT TO U.S. CORPS OF ENGINEERS PERMITTING REGULATIONS. ANY MATERIAL BURIED OR STOCKPILED BEYOND APPROVED CONSTRUCTION LIMITS WOULD REQUIRE ADDITIONAL ARCHAEOLOGICAL INVESTIGATIONS UNLESS BURIED IN A PREVIOUSLY APPROVED BORROW LOCATION.
5. TREES AND SHRUBS IN PUBLIC RIGHT-OF-WAY WHICH ARE IN DIRECT CONFLICT WITH PROPOSED NEW CONSTRUCTION SHALL BE REMOVED BY THE CONTRACTOR WITH THE ENGINEER'S APPROVAL. TREES AND SHRUBS WHICH ARE NOT IN DIRECT CONFLICT WITH PROPOSED NEW CONSTRUCTION SHALL BE SAVED AND PROTECTED FROM DAMAGE.
6. THE CONTRACTOR SHALL GIVE ALL PROPERTY OWNERS AND/OR TENANTS OF DEVELOPED PROPERTY ABUTTING THE CONSTRUCTION OF THIS PROJECT A MINIMUM OF TEN (10) DAYS NOTICE PRIOR TO START OF CONSTRUCTION.
7. THE CONTRACTOR SHALL BE RESPONSIBLE FOR PRESERVING PROPERTY IRONS. THE CONTRACTOR WILL BE REQUIRED TO RE-ESTABLISH ANY PROPERTY IRONS WHICH ARE DAMAGED OR DESTROYED BY HIS CONSTRUCTION OPERATIONS. SUCH IRONS SHALL BE RE-ESTABLISHED BY A LICENSED LAND SURVEYOR IN ACCORDANCE WITH STATE LAWS.
8. THE WATER DISTRIBUTION DIVISION SHALL FIELD LOCATE WATER VALVES ONE TIME DURING CONSTRUCTION WHEN REQUESTED BY THE CONTRACTOR. IT SHALL BE THE CONTRACTOR'S RESPONSIBILITY TO PRESERVE SUCH FIELD LOCATIONS DURING THE CONSTRUCTION PROCESS. WATER VALVES, VALVE BOXES OR FIRE HYDRANTS DAMAGED DURING CONSTRUCTION SHALL BE REPAIRED BY CONTRACTOR AT HIS OWN EXPENSE. VALVE BOXES AND WATER METERS WITHIN THE PROJECT LIMITS SHALL BE ADJUSTED TO MATCH FIELD GRADES.
9. THE CONTRACTOR SHALL NOTIFY THE CONSULTANT ENGINEER AND TOM MASON WITH THE CITY AT 316-268-4574 WITH THE ANTICIPATED CONSTRUCTION START DATE AND NOTIFY THEM OF PROJECT COMPLETION. STAKING AND INSPECTION FOR THIS PROJECT WILL BE THE RESPONSIBILITY OF THE CONTRACTOR.
10. IF TRAFFIC WILL BE IMPACTED BY CONSTRUCTION, A TRAFFIC CONTROL PLAN MUST BE SUBMITTED AND APPROVED BY THE CITY TRAFFIC ENGINEER. BRIAN COON AT traffic@wichita.gov BEFORE CONSTRUCTION CAN BEGIN. THE CONTRACTOR SHALL BE RESPONSIBLE FOR ALL TRAFFIC CONTROL MEASURES TO FACILITATE CONSTRUCTION. ALL CONSTRUCTION ZONE MARKINGS AND SIGNAGE SHALL CONFORM TO THE LATEST VERSION OF THE MANUAL ON UNIFORM TRAFFIC CONTROL DEVICES (MUTCD) AS PUBLISHED BY THE US DEPT. OF TRANSPORTATION, FEDERAL HIGHWAY ADMINISTRATION. ALL COSTS ASSOCIATED WITH CONSTRUCTION MARKINGS AND SIGNAGE SHALL BE THE CONTRACTOR'S RESPONSIBILITY.
11. ALL ELEVATIONS SHOWN ARE U.S.G.S. DATUM (NAVD 29).
12. ALL AREAS DISTURBED DURING CONSTRUCTION THAT WILL NOT BE UNDER PROPOSED PAVEMENT SHALL BE RESTORED TO MATCH EXISTING CONDITIONS.
13. CONTRACTOR SHALL LIMIT THE EXTENT OF TRENCH OPEN OVERNIGHT AND WEEKENDS TO LESS THAN 50 FEET.
14. EXISTING UTILITIES AND THEIR LOCATION, AS SHOWN ON THE PLANS REPRESENT THE BEST INFORMATION OBTAINABLE FOR DESIGN. LOCATION INFORMATION HAS BEEN OBTAINED FROM THE VARIOUS COMPANIES AND IS EITHER FROM COMPANY UTILITY DRAWINGS OR COMPANY PROVIDED FIELD LOCATIONS. THE PLAN LOCATIONS SHOWN ARE NOT GUARANTEED. ADDITIONAL EXISTING UTILITIES MAY ALSO BE ENCOUNTERED.
15. OPENING AND CLOSING OF WATER VALVES SHALL BE DONE SLOWLY TO PREVENT DAMAGE TO THE WATER DISTRIBUTIONS SYSTEM FROM WATER HAMMER. ALL VALVES CLOSED BY THE CONTRACTOR MUST BE REOPENED AS NEW CONSTRUCTION PERMITS. THE PROJECT INSPECTOR MUST ASCERTAIN THAT ANY VALVE CLOSED BY THE CONTRACTOR IS REOPENED. THE CONTRACTOR WILL BE PERMITTED TO OPERATE WATER VALVES ONLY WHEN THE PROJECT INSPECTOR ASSIGNED TO THE PROJECT IS PRESENT.
16. THE CONTRACTOR SHALL LAY A TRACER WIRE AND SET TEST STATIONS ALONG ALL WATER PIPE INSTALLED IN ACCORDANCE WITH CITY SPECIFICATIONS AND TRACER WIRE DETAIL ON DETAIL SHEET WL-101. COST IS SUBSIDIARY TO PIPE INSTALLATION.
17. THE CONTRACTOR SHALL PROVIDE MATERIALS FOR TEMPORARY BLOWOFF OF WATERLINES. CONNECTIONS TO THE EXISTING WATERLINE(S) SHALL BE MADE WITH CLEAN, SWABBED PIPE AND FLUSHED UPON COMPLETION OF TIE-INS
18. REQUESTS FOR SHORT TERM WATER INTERRUPTIONS SHALL BE MADE TO THE CITY WATER DISTRIBUTION DIVISION AND WILL BE SUBJECT TO THEIR APPROVAL. THE CONTRACTOR SHALL GIVE WRITTEN NOTICE TO ANY PROPERTY OWNER, BUSINESS, AND/OR TENANTS THAT WILL HAVE WATER SERVICE INTERRUPTED AT LEAST 5 DAYS IN ADVANCE. SUCH NOTIFICATIONS SHOULD INDICATE THE TIME AND DATE THAT THE WATER WILL BE TURNED OFF AND WHEN THE SERVICE WILL BE RESTORED. NO BUSINESS, PROPERTY OWNER, AND/OR TENANTS SHALL BE WITHOUT WATER SERVICE FOR MORE THAN 8 HOURS. PROPOSED TIE IN LOCATIONS WHICH WILL AFFECT WATER SERVICE TO PROPERTY OWNERS SHALL BE PREFORMED DURING NON-PEAK HOURS.
19. THE CONTRACTOR MUST SCHEDULE THE CONNECTIONS TO THE EXISTING MAIN WITH THE CITY SUCH THAT THERE IS A MINIMUM DISRUPTION OF SERVICE. CONNECTIONS SHALL BE MADE DURING PERIODS OF LOW WATER USAGE. THE CONTRACTOR SHALL SUBMIT HIS PROPOSED SCHEDULE FOR COMPLETING WORK FOR CITY APPROVAL AT LEAST 10 DAYS PRIOR TO BEGINNING CONSTRUCTION.
20. DEFLECTIONS AT PIPE JOINT OR COUPLINGS SHALL NOT EXCEED THE PIPE MANUFACTURES RECOMMENDED MAXIMUM. WHERE DEFLECTIONS ARE GREATER THAN THE MAXIMUM ALLOWED, THE CONTRACTOR SHALL UTILIZE CIMJ LONG SLEEVE OR MULTIPLE JOINTS.
21. ANY EXTENSION GREATER THAN ONE LENGTH OF PIPE SHALL REQUIRE TESTING.
22. ANY EXISTING JOINT EXPOSED DURING EXCAVATION SHALL BE REPLACED IF WITHIN FOUR FEET OF PROPOSED JOINT.
23. CITY MAINTENANCE OF WATER MAINS ENDS AT RIGHT-OF-WAY OR EASEMENT LINE.
24. VALVES 12 INCH AND LARGER ARE TO BE OPERATED BY THE CITY WATER DISTRIBUTION DIVISION, 48 HOURS OF ADVANCE NOTICE IS REQUIRED.
25. ALL WET TAPS SHALL BE INSTALLED BY THE CITY OF WICHITA. THE CONTRACTOR WILL REIMBURSE THE CITY FOR TAPPING FEES.
26. THE CONTRACTOR SHALL PROTECT FROM DAMAGE AND SUPPORT EXISTING UTILITIES THROUGH CONSTRUCTION AS APPROVED BY THE UTILITY OWNER AND THE ENGINEER AT THE CONTRACTOR'S EXPENSE.
27. WORK DONE UNDER THIS PROJECT IS SUBJECT TO THE CITY OF WICHITA REQUIREMENTS FOR "CONSTRUCTION OF INFRASTRUCTURE IMPROVEMENTS BY PRIVATE CONTRACT". THE CONTRACTOR SHALL BE FAMILIAR AND COMPLY WITH ALL OF THE REQUIREMENTS, INCLUDING BONDING, INSPECTION, TESTING, NOTIFICATION, PROVIDING AS-BUILT DRAWINGS, PAYING FOR ALL NECESSARY CONNECTIONS, AND/OR STREET REPAIR FEES AND PROVIDING PIPE MATERIAL AND OTHER CERTIFICATIONS.
28. DEVELOPER FOR THIS PROJECT IS:
    CORNERSTONE CAPITAL GROUP, LLC
    150 N. MARKET
    WICHITA, KS 67202
    CONTACT – GEORGE LAHAM

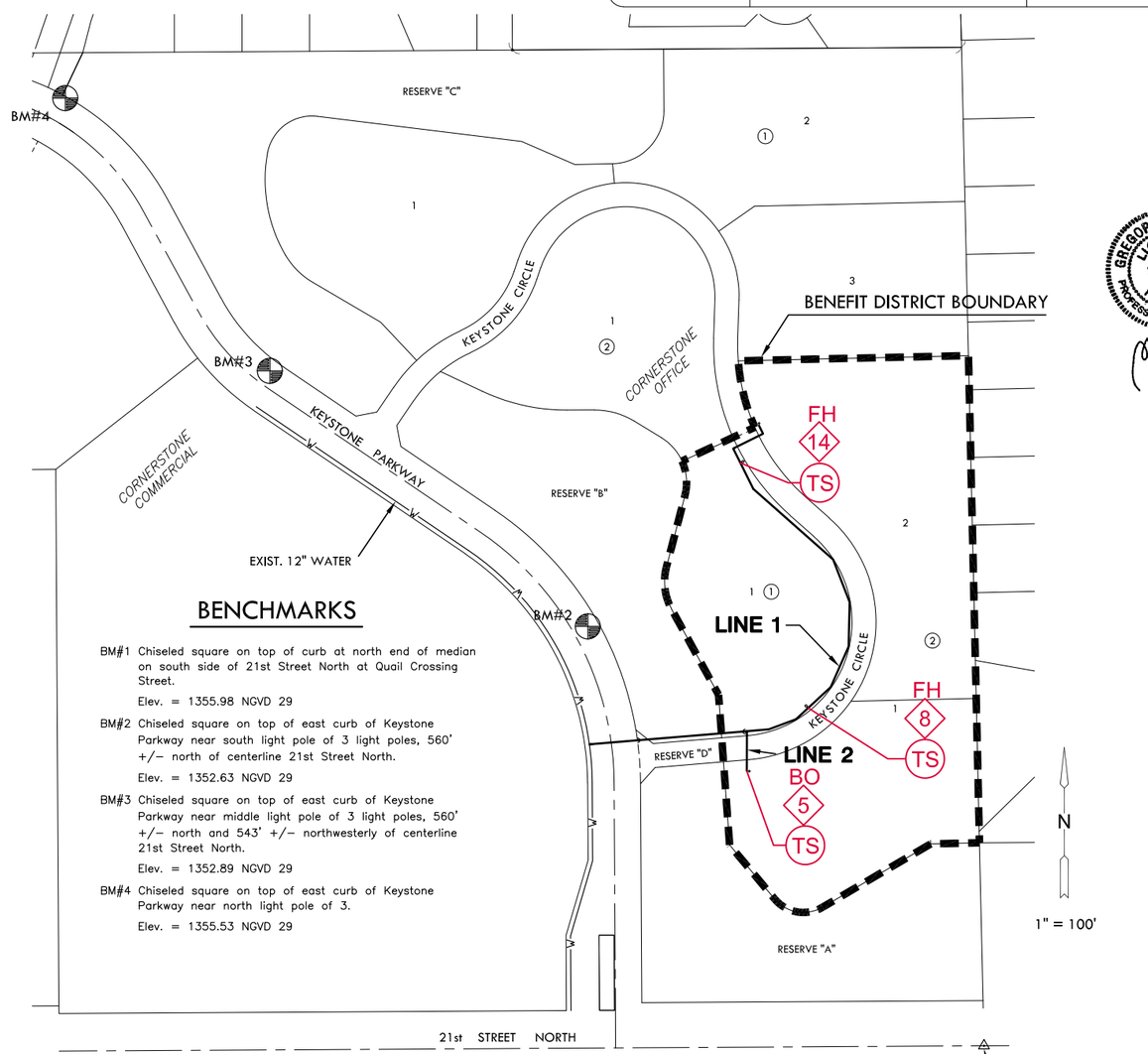


## BENCHMARKS

BM#1 Chiseled square on top of curb at north end of median on south side of 21st Street North at Quail Crossing Street.
Elev. = 1355.98 NGVD 29

BM#2 Chiseled square on top of east curb of Keystone Parkway near south light pole of 3 light poles, 560' +/– north of centerline 21st Street North.
Elev. = 1352.63 NGVD 29

BM#3 Chiseled square on top of east curb of Keystone Parkway near middle light pole of 3 light poles, 560' +/– north and 543' +/– northwesterly of centerline 21st Street North.
Elev. = 1352.89 NGVD 29

BM#4 Chiseled square on top of east curb of Keystone Parkway near north light pole of 3.
Elev. = 1355.53 NGVD 29

NOTE: WATER LINE VALVES TO BE OPERATED BY CONTRACTOR ONLY IF WATER INSPECTOR IS ON SITE.

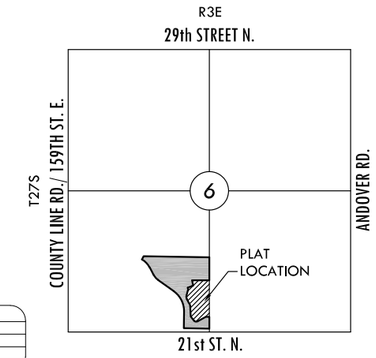


## VICINITY MAP

No Scale

GREGORY J. ALLISON LICENSED 11159 KANSAS PROFESSIONAL ENGINEER
2/4/2016

## INDEX TO DRAWINGS


| SHEET NO. | DESCRIPTION |
|---|---|
| 1 | TITLE SHEET |
| 2 | DETAILS |
| 3 | LINE 1 |
| 4 | LINE 2 |
| 5 | BUBBLE MAP |
| 6-10 | BMP DETAILS |
| 11 | FINAL PLAT |


APPROVED AS NOTED
BY WICHITA PUBLIC WORKS
ENGINEERING DIVISION
& BY WICHITA FIRE DEPARTMENT

Engineering Rebecca Daniel 2/9/2016
Utilities Greg Tolles 2-11-16
Andover Approval Date 12/11/2015

NOTE TO CONTRACTORS

Public Property:

Inspection and testing for the water line is to be provided by a Licensed Consulting Engineering Firm under contract with the Owner/Developer. Said inspection to be in accordance with the City of Wichita standard construction engineering practices and certified by a Professional Engineer Licensed in the state of Kansas. No work shall be performed in dedicated easements or public rights-of-way by the Contractor without such inspection nor shall any work be commenced without written authorization by the City Engineer. All Construction and Materials shall comply with the City of Wichita Specifications and Standards and Special Provision (on file and available in the City Engineer's office) or on the City's Website.

Private Property:

Installation and testing for the fire protection line is to be performed by a City of Wichita licensed fire protection contractor in accordance with the fire codes as adopted by the City of Wichita. All material and construction practices for the fire protection line shall comply with the fire codes as adopted by the City of Wichita (available from the City of Wichita Fire Department). The contractor shall not commence work without notification and approval of the Wichita Fire Department. Inspection of the fire protection line is to be provided by a licensed Engineering Firm under contract with the Owner/Developer and the Fire Department. The contractor shall not start work until the project inspector is assigned to the project and present on the site. Any work done without inspection will be required to be uncovered for inspection.

An approved copy of these plans signed by City staff is required on-site.

*NOTE: ALL LINES TO BE INSTALLED BY OTHERS ARE SUBJECT TO MABCD REVIEW.*

*NOTE: CONTRACTOR TO VERIFY DEPTH AND LOCATION OF EXISTING UTILITIES PRIOR TO CONSTRUCTION.*

MKEC
Wichita, KS · 316-684-9600

WATER DISTRIBUTION PLANS FOR
**CORNERSTONE OFFICE SECOND**
THE CITY OF ANDOVER, KANSAS


©2016
MKEC Engineering
All Rights Reserved
www.mkec.com
These drawings and their contents, including, but not limited to, all concepts, designs, & ideas are the exclusive property of MKEC Engineering (MKEC), and may not be used or reproduced in any way without the express consent of MKEC.


TITLE SHEET

| | |
|---|---|
| PROJECT NO. | 1961 PPW |
| DATE | FEB. 2016 |
| SCALE | 1" = 100' |

| DESIGNED | DRAWN | CHECKED |
|---|---|---|
| DFL | JWC | GJA |

| NO. | REVISION | DATE |
|---|---|---|

SHEET NO.

1 OF 11

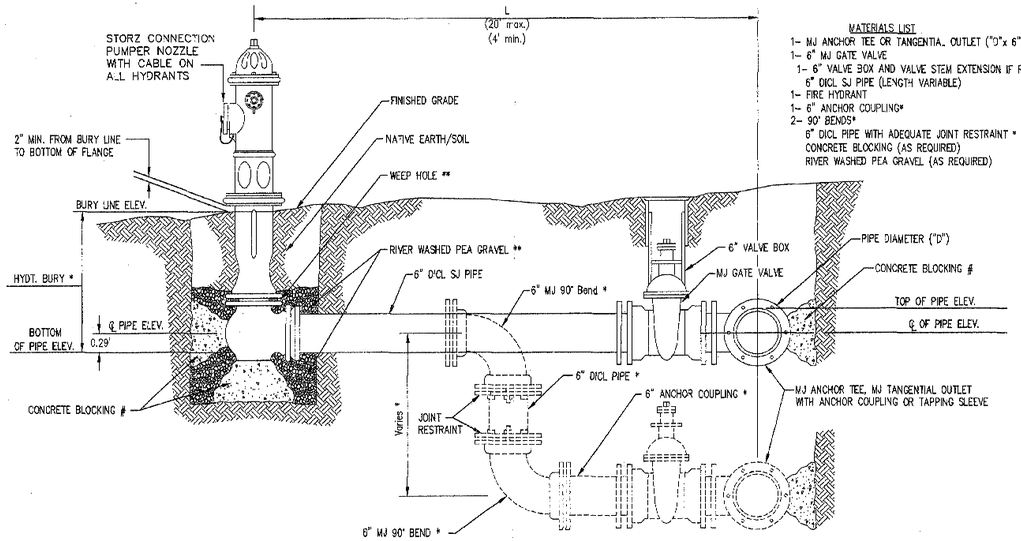


MATERIALS LIST
1– MJ ANCHOR TEE OR TANGENTIAL OUTLET ("D"x 6")
1– 6" MJ GATE VALVE
1– 6" VALVE BOX AND VALVE STEM EXTENSION IF REQUIRED *
6" DICL SJ PIPE (LENGTH VARIABLE)
1– FIRE HYDRANT
1– 6" ANCHOR COUPLING*
2– 90° BENDS*
6" DICL PIPE WITH ADEQUATE JOINT RESTRAINT *
CONCRETE BLOCKING (AS REQUIRED)
RIVER WASHED PEA GRAVEL (AS REQUIRED)

* IF THE REQUIRED HYDRANT BURY IS IN EXCESS OF 5', BUT LESS THAN 7', CONTRACTOR SHALL USE STANDARD 5' HYDRANT BURY AND HYDRANT BARREL EXTENSIONS AS NECESSARY. IF THE REQUIRED HYDRANT BURY IS GREATER THAN 7', CONTRACTOR SHALL USE 5' HYDRANT BURY, 2–MJ 90° BENDS, 6" ANCHOR COUPLING AND 6" DICL PIPE AS NECESSARY FOR VERTICAL ADJUSTMENT. THE CONTRACTOR SHALL PROVIDE ADEQUATE THRUST BLOCKING AT HYDRANT AND MEGALUGS, OR SIMILAR RESTRAINT BETWEEN 90° BENDS TO SECURE ALL FITTINGS DURING TESTING AND OPERATION. THE CONTRACTOR SHALL PROVIDE A VALVE STEM EXTENSION PER DETAIL THIS SHEET.

** CAUTION: WEEP HOLES TO BE KEPT CLEAR DURING CONSTRUCTION AND BACKFILL. CONCRETE FOR THRUST BLOCKING SHALL NOT OBSTRUCT WEEP HOLES. PLACE 1 CUBIC FOOT OF RIVER WASHED PEA GRAVEL AROUND EACH WEEP HOLE.

\# CONCRETE THRUST BLOCKING SHALL BE KEPT CLEAR OF BOLTS, NUTS, AND MJ ACCESSORIES.

## FIRE HYDRANT ASSEMBLY

PER CITY OF WICHITA SPECIFICATIONS

FIRE HYDRANTS REQUIRED

| STATION | BURY LINE ELEVATION | TOP OF PIPE ELEVATION | FIRE HYDRANT BURY REQUIRED* | VALVE STEM EXT. REQUIRED (ft)* |
|---|---|---|---|---|
| 13+00.00 | 1352.60 | 1348.77 | 4.5 | N/A |
| 17+00.00 | 1352.20 | 1347.87 | 5.0 | N/A |
| | | | | |
| | | | | |
| | | | | |
| | | | | |
| | | | | |
| | | | | |
| | | | | |
| | | | | |

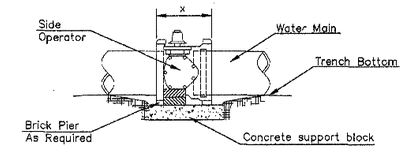


NOTES

1. This detail covers Butterfly Valve installation, inclusive, regardless of type of pipe or joint used. 24" and larger lines to be detailed on plans.
2. 6" Valve Box and Cover required per City of Wichita Std. Specifications.
3. Conc. Support Block to be full width of trench.

## CONCRETE SUPPORT BLOCKING FOR BUTTERFLY VALVE INSTALLATION

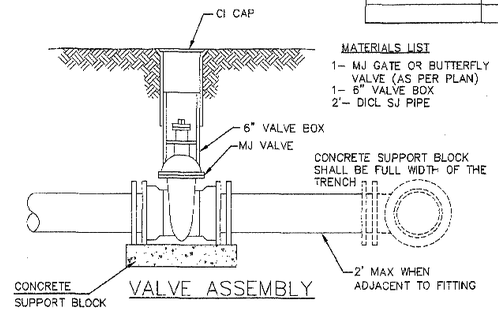


MATERIALS LIST
1– MJ GATE OR BUTTERFLY VALVE (AS PER PLAN)
1– 6" VALVE BOX
2'– DICL SJ PIPE

## VALVE ASSEMBLY

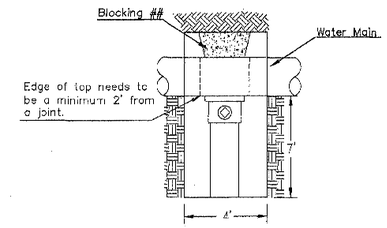


## CITY TAP

## When the City of Wichita makes tap, blocking is to be done by Contractor

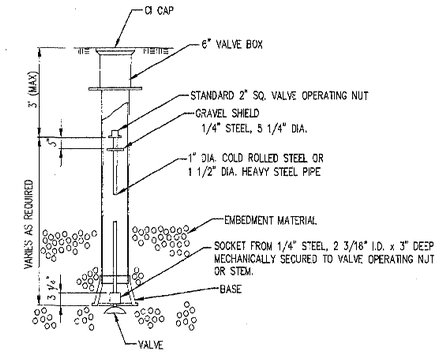


## VALVE STEM EXTENSION DETAIL

NOTE: ONE VALVE STEM EXTENSION FOR EACH VALVE BURIED GREATER THAN 5'.

MATERIALS LIST
1–MJ GATE OR BUTTERFLY VALVE (AS PER PLAN)
1–MJ ANCHOR COUPLING (12" OR SMALLER)
1–6" VALVE BOX
CONCRETE SUPPORT BLOCK SHALL BE FULL WIDTH OF THE TRENCH

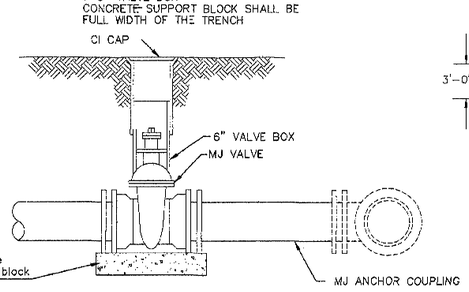


## ANCHORED VALVE ASSEMBLY

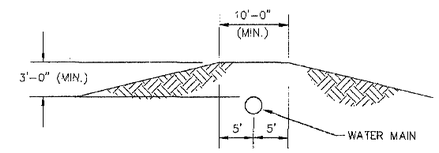


## PROTECTIVE FILL DETAIL

MINIMUM PROTECTIVE FILL SHALL BE PROVIDED IN ALL INSTANCES WHERE COVER OVER THE PROP. WATER LINE IS LESS THAN 3'.
(COST SUBSIDIARY TO PIPE INSTALLATION)

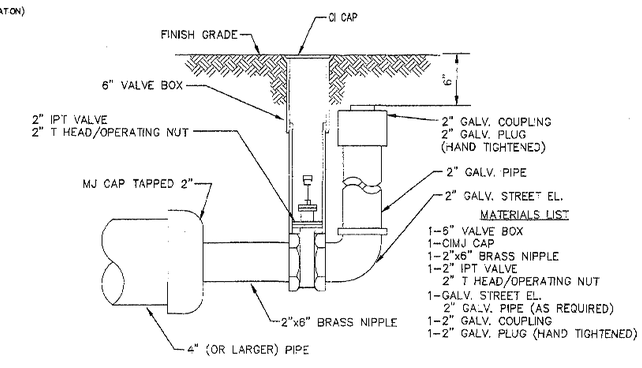


MATERIALS LIST
1–6" VALVE BOX
1–CIMJ CAP
1–2"x6" BRASS NIPPLE
1–2" IPT VALVE
2" T HEAD/OPERATING NUT
1–GALV. STREET EL.
2" GALV. PIPE (AS REQUIRED)
1–2" GALV. COUPLING
1–2" GALV. PLUG (HAND TIGHTENED)

## 2" BLOWOFF ASSEMBLY

AS-BUILT PLANS - APRIL 2016

REVISED: JULY 2015

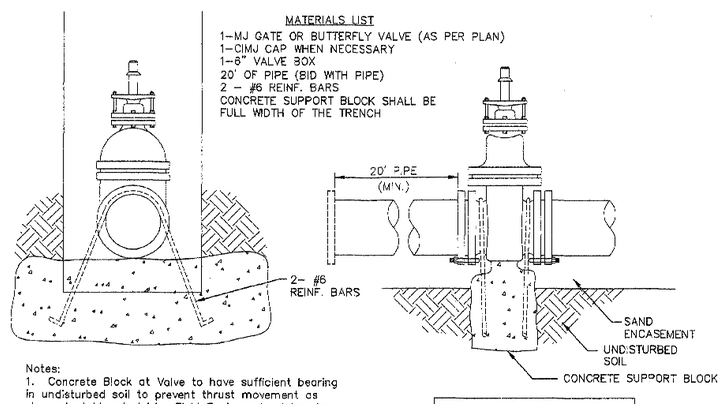


MATERIALS LIST
1–MJ GATE OR BUTTERFLY VALVE (AS PER PLAN)
1–CIMJ CAP WHEN NECESSARY
1–6" VALVE BOX
20' OF PIPE (BID WITH PIPE)
2 – #6 REINF. BARS
CONCRETE SUPPORT BLOCK SHALL BE FULL WIDTH OF THE TRENCH

Notes:
1. Concrete Block at Valve to have sufficient bearing in undisturbed soil to prevent thrust movement as shown in table at right. Field Engineer to determine thrust loading of undisturbed soil and final size of thrust block.
2. The thrust block shall be constructed such that bolts, nuts, and other MJ accessories are kept clear of concrete.
3. All valves at dead ends and at other locations as called out on the plans shall be blocked as shown here.

THRUST AT VALVES

| VALVE | THRUST AT 150 #/in² |
|---|---|
| 4" | 1809 lbs. |
| 6" | 4245 lbs. |
| 8" | 7540 lbs. |
| 12" | 16965 lbs. |

## ANCHORED VALVE ASSEMBLY, SPECIAL

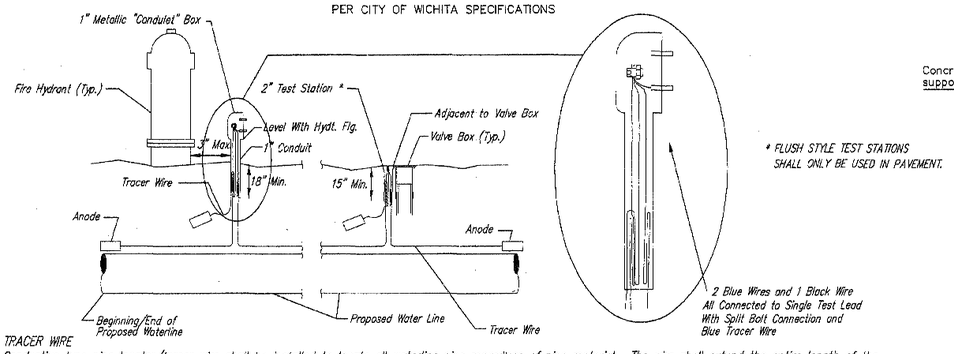


* FLUSH STYLE TEST STATIONS SHALL ONLY BE USED IN PAVEMENT.

TRACER WIRE

Conductive type pipe locator/tracer wire shall be installed to locate all waterline pipe regardless of pipe material. The wire shall extend the entire length of the proposed pipe. The wire shall be taped to the waterline and pulled with the pipe. A waterproof connector shall be used at splice locations. Test stations shall be installed adjacent to all fire hydrants along the waterline and at blowoffs or valves near the ends of waterlines. Any exception to the location shall be approved by the engineer. At each test station, the tracer wire shall be connected to a 3 lb. Zinc or magnesium anode. Anodes shall also be attached to the tracer wire at both the beginning and the end of the proposed waterline. A typical layout of the tracer wire and test station is provided in the above figure.

WIRE

The tracer wire shall be Blue No. 12 AWG CCS with 3045 mil HDPE insulation. The isulation shall be heat, oil, and gasoline resistant as manufactured by Temple Electric or approved equal. To allow for grade adjustment, a minimum of 12" of excess wire shall be coiled at the bottom of the test station for all wires. the insulation sheathing shall be removed such that 1" bare copper wire at all points of connection. Contractor shall attach wire being installed with proposed water main to any tracer wire installed with adjacent waterline projects.

TEST STATIONS

A complete list of approved Tracer Wire can be found on City of Wichita's website at www.wichita.gov
The test station for fire hydrant applications shall be a 1 inch galvanized "conduiet" style test station as manufactured by AGRA Industries with a removable solid cover having two leads extending from the face or approved equal. The test station for valve applications shall be 2 inch flush style test station T2PS38 as manufactured by HANDLEY Industries or approved equal. The "conduit" style test station shall be attached to a 1 inch rigid galvanized conduit with a minimum length of 36" and plastic end bushing. The flush style shall have the word "WATER" stamped or molded into the lid. All test stations shall be manufactured using molded blue tops or sufficiently coated with blue enamel paint. The tracer wire and the anode wire shall be installed to allow 10 inches of wire within the test station. In concrete environments such as sidewalks or in the downtown area the contractor shall use the flush style test station. The location of all test stations shall be approved by the engineer, recorded, and shown in the as–built drawings.

ANODES

The anodes shall be 3 lb. bare zinc or magnesium. The anodes shall be buried at the same elevation as the waterline at each test station. The anodes shall be connected to 12 AWG ccs which shall be extended to the test station.

## TRACER WIRE DETAIL

COST IS SUBSIDIARY TO PIPE INSTALLATION

GARY L. JANZEN LICENSED PROFESSIONAL ENGINEER 16294 KANSAS 07/29/15

CITY OF WICHITA
PUBLIC WORKS & UTILITIES ENGINEERING DIVISION

STANDARD WATER ASSEMBLY DETAIL

CITY ENGINEER
GARY JANZEN, P.E.

| PROJECT NUMBER | OCA NUMBER | DATE |
|---|---|---|
| 1961 PPW | 607853 | |

CITY ENGINEER'S OFFICE
CITY HALL - SEVENTH FLOOR
455 NORTH MAIN STREET
WICHITA, KANSAS 67202-1620
(316) 268-4501

SHEET 2 OF 11

WL-101

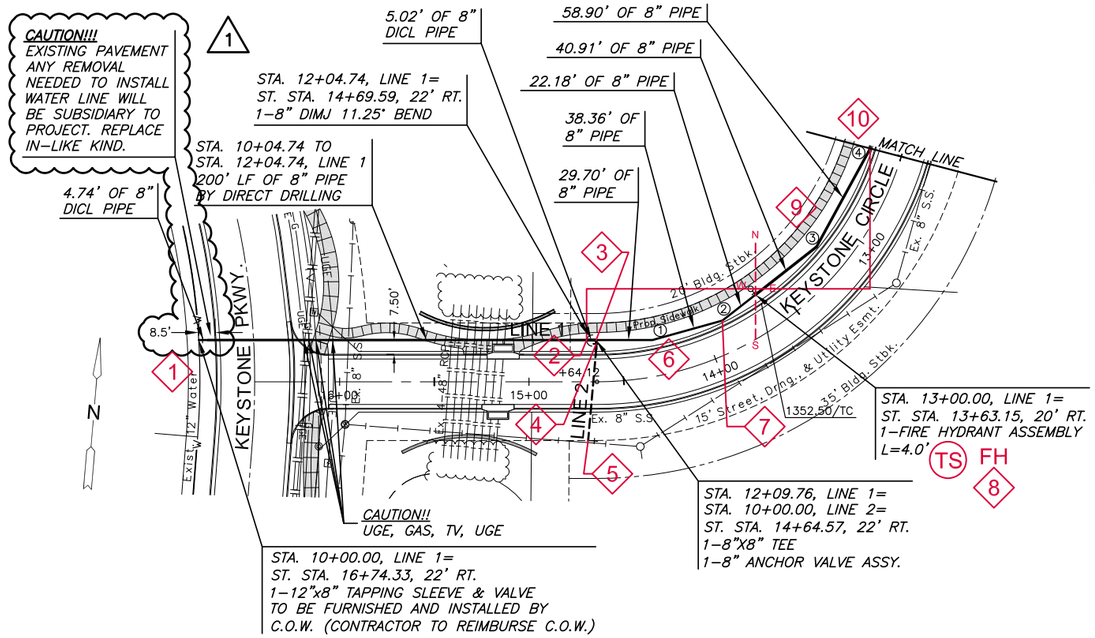


| BEND CHART | | | | |
|---|---|---|---|---|
| NO. | 8" BEND | STA. | BL STA. | OFFSET, RT. |
| 1 | 11.25° | 12+39.46 | 14+30.90 | 19.1' RT. |
| 2 | 22.5° | 12+77.82 | 13+87.87 | 17' RT. |
| 3 | 22.5° | 13+40.91 | 13+17.16 | 17' RT. |
| 4 | 22.5° | 13+99.81 | 12+51.22 | 17' RT. |
| 5 | 22.5° | 14+58.71 | 11+85.27 | 17' RT. |
| 6 | 22.5° | 15+19.73 | 11+17.00 | 16.6' RT. |
| 7 | 22.5° | 16+61.36 | 9+75.42 | 27.8' RT. |
| 8 | 90° | 17+21.29 | 9+20.47 | 22' RT. |
| 9 | 90° | 17+65.56 | 9+20.47 | 22.3' LT. |

MAINTAIN 2' MINIMUM DISTANCE BEHIND BACK OF CURB ON BENDS 1-6 (SEE DETAIL A THIS SHEET)

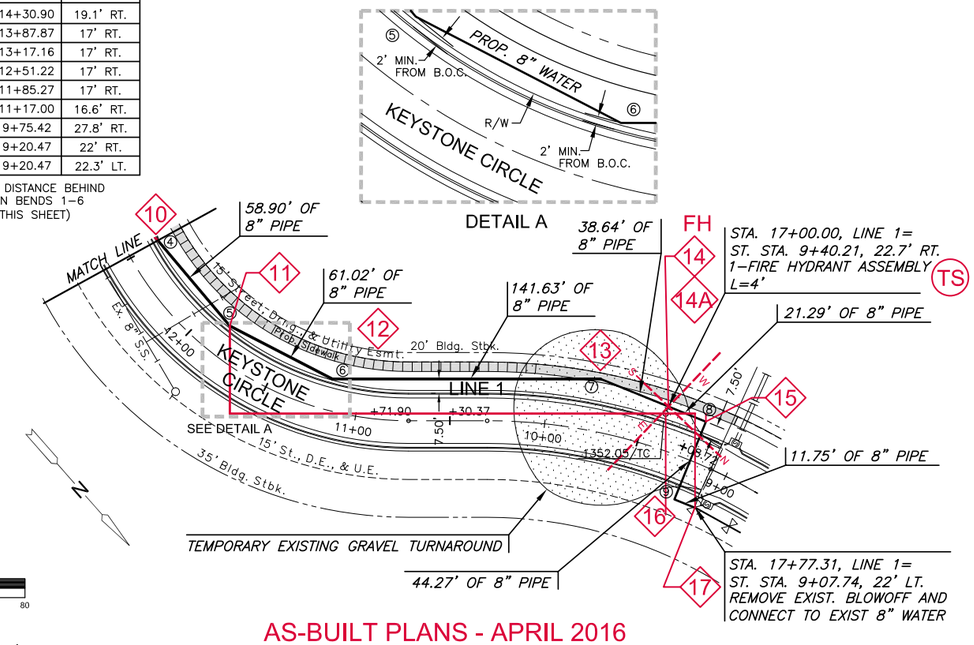


SCALE: 1"=40'

AS-BUILT PLANS - APRIL 2016

NOTE:
CONTRACTOR TO VERIFY LOCATION AND ELEVATION OF EXISTING WATER LINE PRIOR TO CONSTRUCTION.

## PLAN LINE 1
## PROFILE LINE 1

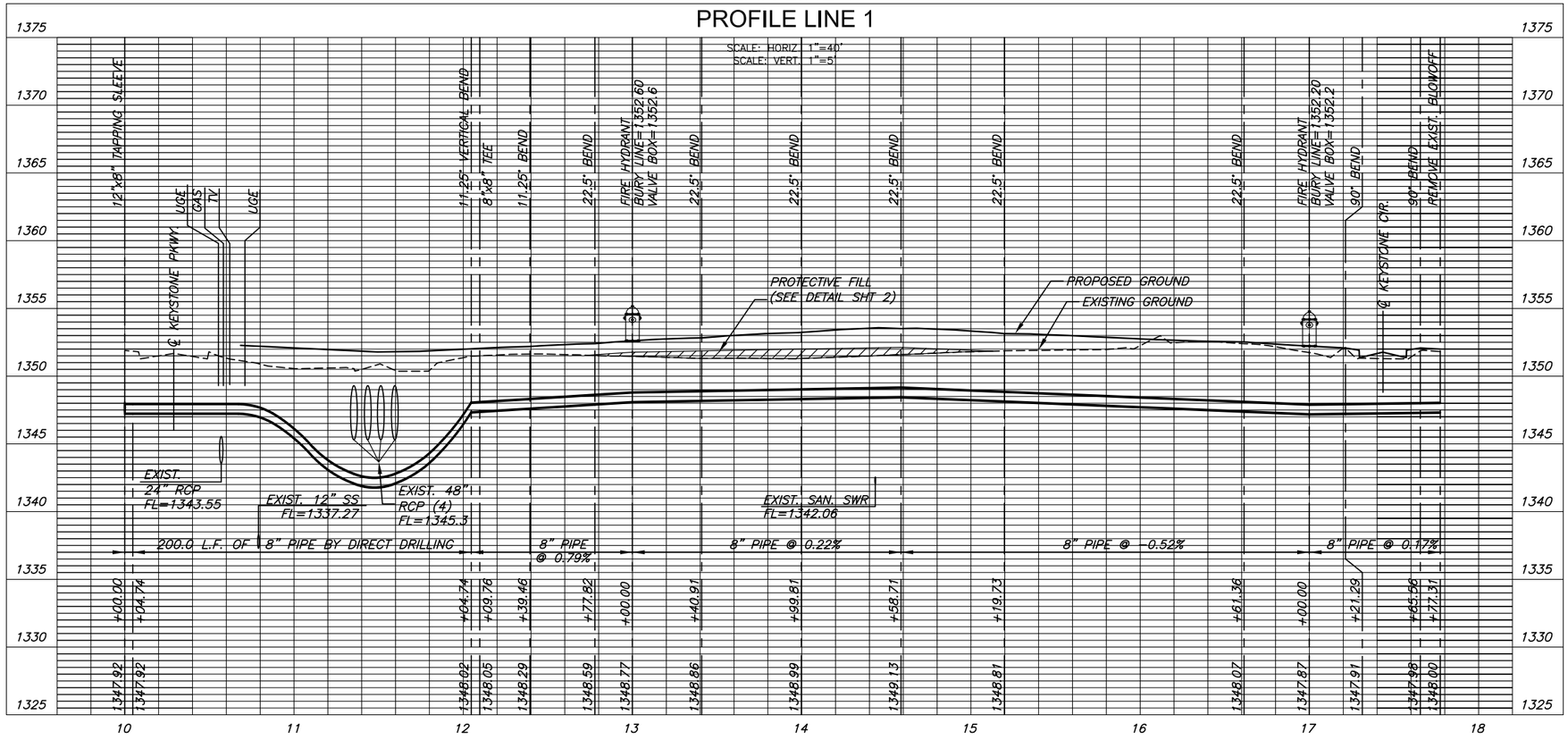


MKEC
Wichita, KS · 316-684-9600

WATER DISTRIBUTION PLANS FOR
# CORNERSTONE OFFICE SECOND
THE CITY OF ANDOVER, KANSAS

©2016
MKEC Engineering
All Rights Reserved
www.mkec.com
These drawings and their contents, including, but not limited to, all concepts, designs, & ideas are the exclusive property of MKEC Engineering (MKEC), and may not be used or reproduced in any way without the express consent of MKEC.

LINE 1

| | |
|---|---|
| PROJECT NO. | 1961 PPW |
| DATE | FEB. 2016 |
| SCALE | 1" = 40' |

| DESIGNED | DRAWN | CHECKED |
|---|---|---|
| DFL | JWC | GJA |

| NO. | REVISION | DATE |
|---|---|---|
| 1 | ADDED NOTE | 02/22/16 |

SHEET NO.
3 OF 11

PLOTTED: Thursday, April 28, 2016 @ 07:53AM
X:\PROJECTS\2015\1501010859_LA\MAI_CORNERSTONE 2ND OFFICE ADD_15859 CAD\SHTS\05 CIVIL\WTR\15859_C1.DWG

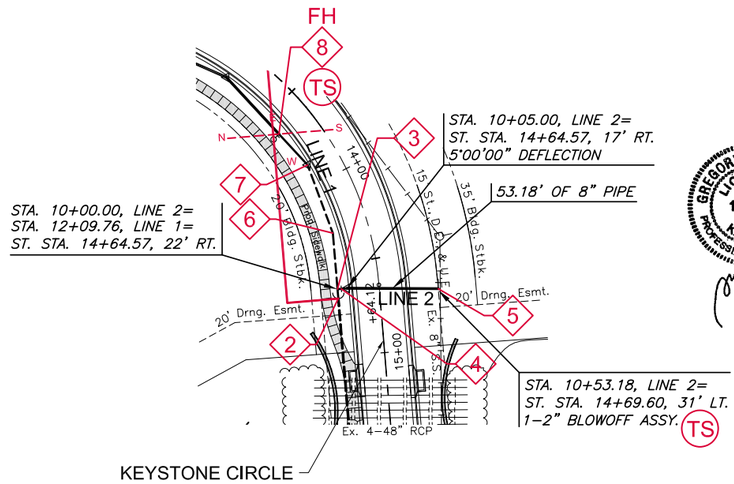

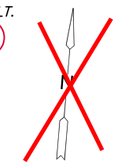


AS-BUILT PLANS - APRIL 2016

SCALE: 1"=40'
0 20 40 80

NOTE:
CONTRACTOR TO VERIFY LOCATION AND ELEVATION OF EXISTING WATER LINE PRIOR TO CONSTRUCTION.

PLAN LINE 2
PROFILE LINE 2

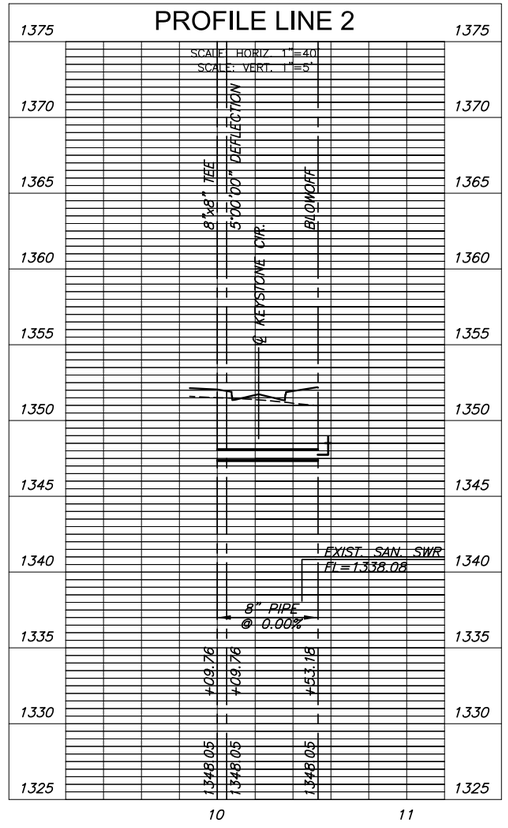


| NO. | DESCRIPTION | APPROXIMATE LOCATION |
|---|---|---|
| 1 | 12"x8" TAPPING SLEEVE & VALVE | 29.5' W. & 22.0' N. OF INTERSECTION OF KEYSTONE PKWY. & KEYSTONE CIRCLE |
| 2 | 8" DIMJ 11.25° BEND | 86.6' W. & 27.0' S. OF FH 8 |
| 3 | 1-8"X8" TEE | 84.1' W. & 27.0' S. OF FH 8 |
| 4 | 8" ANCHOR VALVE ASSY. | 81.6' W. & 29.0' S. OF FH 8 |
| 5 | 2" BLOWOFF ASSY. | 87.8' W. & 80.0' S. OF FH 8 |
| 6 | 8" 11.25° BEND | 51.9' W. & 27.0' S. OF FH 8 |
| 7 | 8" DIMJ 22.5° BEND | 14.9' W. & 16.8' S. OF FH 8 |
| 8 | FIRE HYDRANT | |
| 8A | VALVE | 2' S OF FH 8 |
| 9 | 8" DIMJ 22.5° BEND | 34.8' E. & 22.1' N. OF FH 8 |
| 10 | 8" DIMJ 22.5° BEND | 63.0' E. & 73.8' N. OF FH 8 |
| 11 | 8" DIMJ 22.5° BEND | 230.1' S.E. & 46.3' S.W. OF FH 14 |
| 12 | 8" DIMJ 22.5° BEND | 175.9' S.E. & 18.2' S.W. OF FH 14 |
| 13 | 8" DIMJ 22.5° BEND | 34.3' S.E. & 18.2' S.W. OF FH 14 |
| 14 | FIRE HYDRANT | |
| 14A | VALVE | 2' W OF FH 14 |
| 15 | 8" DIMJ 90° BEND | 21.2' N.W. & 4.3' N.W. OF FH 14 |
| 16 | 8" DIMJ 90° BEND | 4.6' N.E. & 45.3' N.E. OF FH 14 |
| 17 | CONNECT TO EX. 8" WTR. | 15.5' N.E. & 49.7' N.E. OF FH 14 |

MKEC
Wichita, KS · 316-684-9600

WATER DISTRIBUTION PLANS FOR
# CORNERSTONE OFFICE SECOND
THE CITY OF ANDOVER, KANSAS

©2016
MKEC Engineering
All Rights Reserved
www.mkec.com
These drawings and their contents, including, but not limited to, all concepts, designs, & ideas are the exclusive property of MKEC Engineering (MKEC), and may not be used or reproduced in any way without the express consent of MKEC.

LINE 2

| | |
|---|---|
| PROJECT NO. | 1961 PPW |
| DATE | FEB. 2016 |
| SCALE | 1" = 40' |

| DESIGNED | DRAWN | CHECKED |
|---|---|---|
| DFL | JWC | GJA |

| NO. | REVISION | DATE |
|---|---|---|

SHEET NO.
4 OF 11

PLOTTED: Thursday, April 28, 2016 @ 07:31AM

J:\PROJECTS\2015\15010\10658_LAHAM_CORNERSTONE 2ND OFFICE ADD_15658 CAD\SHTS\05 CIVIL\WTR\15658_C2.DWG

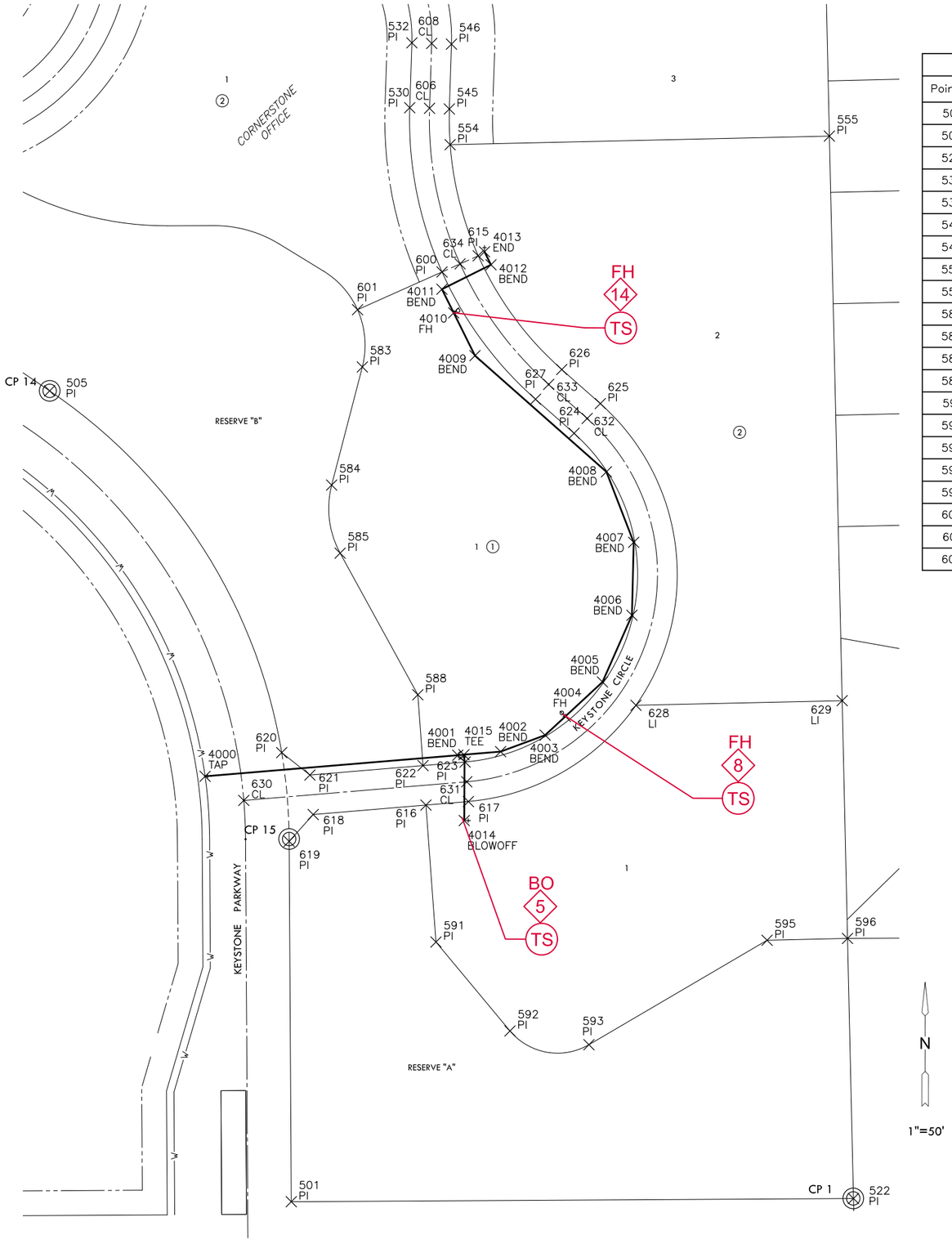


| PLAT POINTS | | | |
|---|---|---|---|
| Point # | Northing | Easting | Desc. |
| 501 | 1700162.16 | 1704179.69 | PI |
| 505 | 1700816.78 | 1703984.63 | PI |
| 522 | 1700164.77 | 1704633.64 | PI |
| 530 | 1701045.40 | 1704275.38 | PI |
| 532 | 1701097.77 | 1704277.08 | PI |
| 545 | 1701044.36 | 1704307.36 | PI |
| 546 | 1701096.73 | 1704309.07 | PI |
| 554 | 1701015.54 | 1704307.97 | PI |
| 555 | 1701022.46 | 1704614.25 | PI |
| 583 | 1700836.11 | 1704237.10 | PI |
| 584 | 1700740.73 | 1704212.32 | PI |
| 585 | 1700685.78 | 1704219.15 | PI |
| 588 | 1700571.45 | 1704281.89 | PI |
| 591 | 1700371.84 | 1704296.58 | PI |
| 592 | 1700300.07 | 1704356.33 | PI |
| 593 | 1700288.93 | 1704420.05 | PI |
| 595 | 1700373.27 | 1704563.91 | PI |
| 596 | 1700374.74 | 1704628.89 | PI |
| 600 | 1700912.77 | 1704301.44 | PI |
| 601 | 1700882.28 | 1704233.26 | PI |
| 606 | 1701044.88 | 1704291.37 | CL |

| PLAT POINTS | | | |
|---|---|---|---|
| Point # | Northing | Easting | Desc. |
| 608 | 1701097.25 | 1704293.08 | CL |
| 615 | 1700925.83 | 1704330.65 | PI |
| 616 | 1700482.38 | 1704288.45 | PI |
| 617 | 1700485.26 | 1704322.78 | PI |
| 618 | 1700474.77 | 1704197.43 | PI |
| 619 | 1700453.11 | 1704177.99 | PI |
| 620 | 1700524.79 | 1704172.00 | PI |
| 621 | 1700506.66 | 1704194.77 | PI |
| 622 | 1700514.30 | 1704286.10 | PI |
| 623 | 1700517.14 | 1704320.12 | PI |
| 624 | 1700782.54 | 1704408.08 | PI |
| 625 | 1700806.52 | 1704429.26 | PI |
| 626 | 1700834.01 | 1704398.14 | PI |
| 627 | 1700810.03 | 1704376.95 | PI |
| 628 | 1700562.93 | 1704458.07 | LI |
| 629 | 1700566.69 | 1704624.55 | LI |
| 630 | 1700486.14 | 1704141.40 | CL |
| 631 | 1700501.20 | 1704321.45 | CL |
| 632 | 1700794.53 | 1704418.67 | CL |
| 633 | 1700822.02 | 1704387.55 | CL |
| 634 | 1700919.30 | 1704316.04 | CL |

| WATER POINTS | | | |
|---|---|---|---|
| Point # | Northing | Easting | Desc. |
| 4000 | 1700505.61 | 1704110.14 | TAP |
| 4001 | 1700522.67 | 1704314.17 | BEND |
| 4002 | 1700525.56 | 1704348.77 | BEND |
| 4003 | 1700538.89 | 1704384.74 | BEND |
| 4004 | 1700553.97 | 1704401.00 | FH |
| 4005 | 1700581.78 | 1704431.00 | BEND |
| 4006 | 1700635.65 | 1704454.82 | BEND |
| 4007 | 1700694.53 | 1704456.22 | BEND |
| 4008 | 1700751.45 | 1704434.21 | BEND |
| 4009 | 1700845.21 | 1704328.06 | BEND |
| 4010 | 1700879.80 | 1704310.85 | FH |
| 4011 | 1700898.87 | 1704301.36 | BEND |
| 4012 | 1700918.59 | 1704340.99 | BEND |
| 4013 | 1700929.11 | 1704335.76 | END |
| 4014 | 1700469.92 | 1704319.40 | BLOWOFF |
| 4015 | 1700523.09 | 1704319.17 | TEE |

## CONTROL POINTS

| POINT | NORTHING | EASTING | DESCRIPTION |
|---|---|---|---|
| 1 | 1700164.772 | 1704633.600 | 1/2" rebar w/ PEC id cap |
| 14 | 1700816.782 | 1703984.632 | 5/8" rebar w/ PEC id cap |
| 15 | 1700454.975 | 1704177.984 | 5/8" rebar w/ PEC id cap |

AS-BUILT PLANS - APRIL 2016

GREGORY J. ALLISON LICENSED 11159 KANSAS PROFESSIONAL ENGINEER
2/4/2016

*EVERY ATTEMPT HAS BEEN MADE TO INSURE ALL COORDINATE VALUES SHOWN ARE AN ACCURATE AND TRUE REPRESENTATION OF THE CURRENT PLANS. ALL VALUES ARE TO BE CONFIRMED WITH THE FINAL SIGNED PLAN SET BEFORE USE.*

MKEC
Wichita, KS · 316-684-9600

WATER DISTRIBUTION PLANS FOR
# CORNERSTONE OFFICE SECOND
THE CITY OF ANDOVER, KANSAS

©2016
MKEC Engineering
All Rights Reserved
www.mkec.com
These drawings and their contents, including, but not limited to, all concepts, designs, & ideas are the exclusive property of MKEC Engineering (MKEC), and may not be used or reproduced in any way without the express consent of MKEC.

BUBBLE MAP

| | |
|---|---|
| PROJECT NO. | 1961 PPW |
| DATE | FEB. 2016 |
| SCALE | 1"=50' |

| DESIGNED | DRAWN | CHECKED |
|---|---|---|
| DFL | JWC | GJA |

| NO. | REVISION | DATE |
|---|---|---|
| | | |

SHEET NO.
5 OF 11

PLOTTED: Thursday, April 28, 2016 @ 07:29AM
Z:\PROJECTS\2015\15010\10868_LA\AAL_CORNERSTONE 2ND OFFICE ADD_15868 CAD\SHTS\05 CIVIL\WTR\15868_BUBBLE.DWG

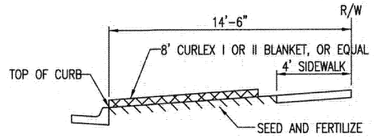


SECTION B-B

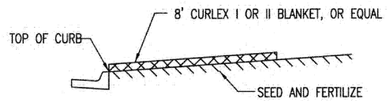


SECTION A-A

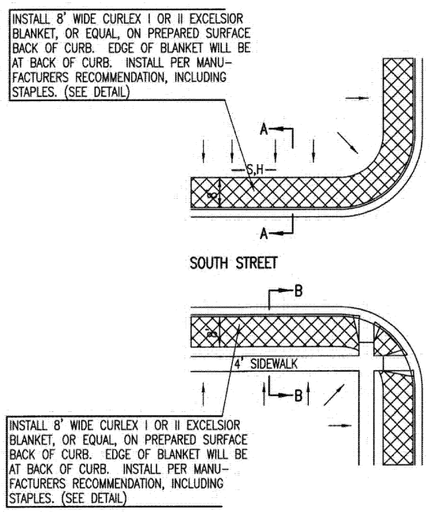


GENERAL NOTES

1. EXCELSIOR MAT TO BE INSTALLED WHEN SOD IS NOT SPECIFIED ON PROJECT.
2. EXCELSIOR BLANKET TO BE INSTALLED OVER SEED AND FERTILIZER, AS SPECIFIED IN THE PROJECT SPECIFICATIONS.
3. AFTER INSTALLATION OF EXCELSIOR BLANKET, AT LOCATIONS WHERE CONCENTRATED FLOW CARRIES SEDIMENT OVER THE CURB AND INTO THE GUTTER, SUPPLEMENTAL EROSION CONTROL DEVICES WILL BE INSTALLED BY THE CONTRACTOR AS NEEDED, TO FIX THE PROBLEM.

## BACK OF CURB PROTECTION DETAIL

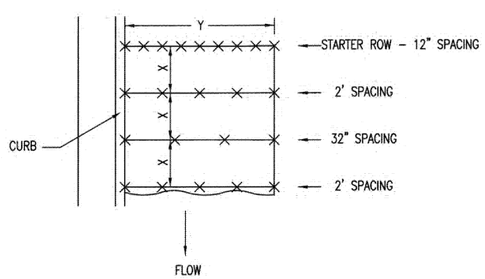


STAPLE PATTERN

NOTES: USE 6" SEAM OVERLAP

(X & Y = RECOMMENDED BY MANUFACTURE)

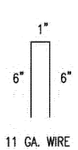


STAPLE

## DETAILS FOR APPROVED EROSION CONTROL MAT

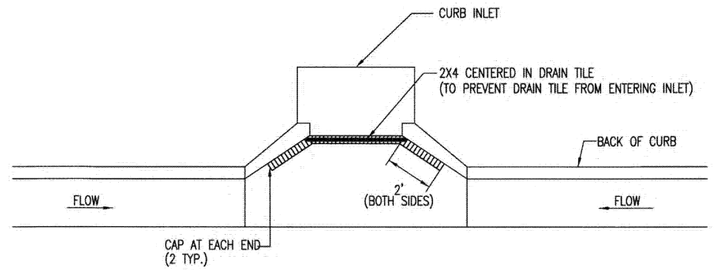


NOTE:
PLACE 4" PERFORATED PVC PIPE, FILLED WITH 1/2"-1" DIA. GRAVEL, IN FRONT OF CURB INLET AS SHOWN.

| 2X4 LENGTH | INLET TYPE | INLET OPENING |
|---|---|---|
| 5'-6" | 1-A | 5'-0" |
| 10'-6" | 1-A | 10'-0" |
| 15'-6" | 1-A | 15'-0" |

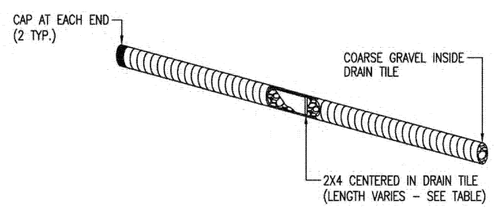


## CURB INLET PROTECTION

4" PERFORATED PIPE W/ GRAVEL

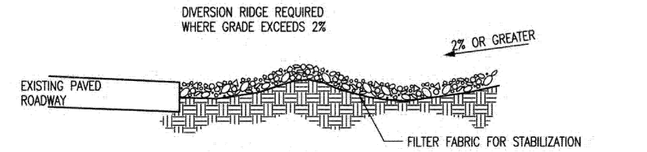


SECTION C-C

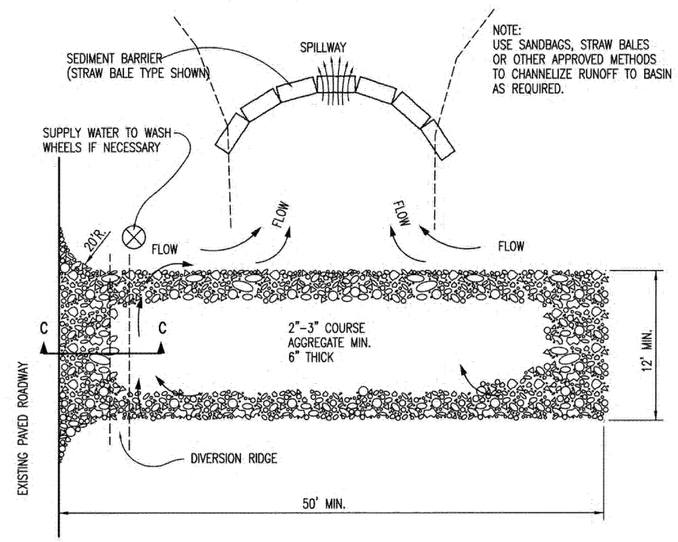


## STABILIZED CONSTRUCTION ENTRANCE

GENERAL NOTES

1. THE ENTRANCE SHALL BE MAINTAINED IN A CONDITION THAT WILL PREVENT TRACKING OR FLOWING OF SEDIMENT ONTO PUBLIC RIGHTS-OF-WAY. THIS MAY REQUIRE TOP DRESSING, REPAIR AND/OR CLEANOUT OF ANY MEASURES USED TO TRAP SEDIMENT.
2. WHEN NECESSARY, WHEELS SHALL BE CLEANED PRIOR TO ENTRANCE ONTO PUBLIC RIGHT-OF-WAY.
3. WHEN WASHING IS REQUIRED, IT SHALL BE DONE ON AN AREA STABILIZED WITH CRUSHED STONE THAT DRAINS INTO AN APPROVED SEDIMENT TRAP OR SEDIMENT BASIN, AS SHOWN ABOVE.
4. DRIVE ENTRANCES ONTO RESIDENTIAL LOTS WILL NOT BE REQUIRED TO HAVE THE SEDIMENT BARRIER SHOWN, BUT WHEEL WASHING MAY BE REQUIRED IF STABILIZED ENTRANCE IS NOT SUFFICIENT TO KEEP MUD FROM BEING TRACKED ONTO ADJACENT STREET. ENTRANCE SHALL EXTEND FROM BACK OF CURB TO DWELLING.

REVISION DATE: MAY 2013

GARY L. JANZEN LICENSED 16294 KANSAS PROFESSIONAL ENGINEER
05/30/13

AS-BUILT PLANS - APRIL 2016

CITY OF WICHITA
PUBLIC WORKS & UTILITIES ENGINEERING DIVISION

BACK OF CURB PROTECTION, CURB INLET PROTECTION AND CONSTRUCTION ENTRANCE

CITY ENGINEER
GARY JANZEN, P.E.

| PROJECT NUMBER | OCA NUMBER | DATE |
|---|---|---|
| 1961 PPW | 607853 | |

CITY ENGINEER'S OFFICE
CITY HALL - SEVENTH FLOOR
455 NORTH MAIN STREET
WICHITA, KANSAS 67202-1620
(316) 268-4501

SHEET
6 OF 11

SW-501

NOTE: POINT A MUST BE HIGHER THAN POINT B SO THAT WATER FLOWS OVER THE SILT FENCE FABRIC AND NOT AROUND IT.

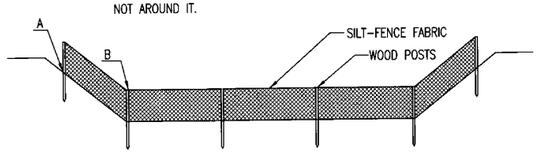


ELEVATION

## SILT FENCE DITCH CHECKS

(STREAM PROTECTION)

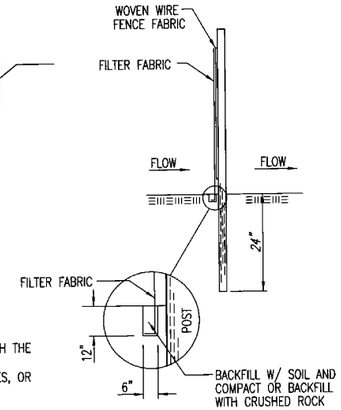


ANCHOR TRENCH DETAIL

MATERIAL SPECIFICATION:

SILT FENCE FABRIC SHOULD CONFORM TO THE AASHTO M288 96 SILT FENCE SPECIFICATION.
THE POSTS USED TO SUPPORT THE SILT FENCE FABRIC SHOULD BE A HARDWOOD MATERIAL WITH THE FOLLOWING MINIMUM DIMENSIONS: 2" SQUARE (NOMINAL) BY 4' LONG.
SILT FENCE FABRIC SHOULD BE ATTACHED TO THE WOODEN POSTS WITH STAPLES, WIRE, ZIP TIES, OR NAILS.

PLACEMENT:

PLACE SILT FENCE IN DITCHES WHERE IT IS UNLIKELY THAT IT WILL BE OVERTOPPED.
WATER SHOULD FLOW THROUGH A SILT FENCE DITCH CHECK, NOT OVER IT. SILT FENCE DITCH CHECKS OFTEN FAIL WHEN OVERTOPPED.
SILT FENCE DITCH CHECKS SHOULD BE PLACED PERPENDICULAR TO THE FLOWLINE OF THE DITCH.
THE SILT FENCE SHOULD EXTEND FAR ENOUGH SO THAT THE GROUND LEVEL AT THE ENDS OF THE FENCE IS HIGHER THAN THE TOP OF THE LOW POINT OF THE FENCE. THIS PREVENTS WATER FROM FLOWING AROUND THE CHECK.
SILT FENCE DITCH CHECKS SHOULD NOT BE PLACED IN DITCHES WHERE HIGH FLOWS ARE EXPECTED. ROCK CHECKS SHOULD BE USED INSTEAD.
SILT FENCE SHOULD BE PLACED IN DITCHES WITH SLOPES OF 6% OR LESS. FOR SLOPES STEEPER THAN 6%, ROCK CHECKS SHOULD BE USED.

THE FOLLOWING TABLE PROVIDES CHECK SPACING FOR A GIVEN DITCH GRADE:

| DITCH CHECK DITCH GRADE (%) | SPACING CHECK SPACING (FEET) |
|---|---|
| 0.5 | 200 |
| 1.0 | 200 |
| 2.0 | 100 |
| 3.0 | 65 |
| 4.0 | 50 |
| 5.0 | 40 |
| 6.0 | 30 |

PROPER INSTALLATION METHOD:

EXCAVATE A TRENCH PERPENDICULAR TO THE DITCH FLOWLINE THAT IS AT LEAST 12" DEEP BY 6" WIDE.
EXTEND THE TRENCH IN A STRAIGHT LINE ALONG THE ENTIRE LENGTH OF THE PROPOSED DITCH CHECK.
PLACE THE SOIL ON THE UPSTREAM SIDE OF THE TRENCH FOR LATER USE.
ROLL OUT A CONTINUOUS LENGTH OF SILT FENCE FABRIC ON THE DOWNSTREAM SIDE OF THE TRENCH.
PLACE THE EDGE OF THE FABRIC IN THE TRENCH STARTING AT THE TOP UPSTREAM EDGE OF THE TRENCH. LINE TWO SIDES OF THE TRENCH WITH THE FABRIC AS SHOWN ON DETAIL. BACKFILL OVER THE FABRIC IN THE TRENCH WITH THE EXCAVATED SOIL AND COMPACT. AFTER FILLING THE TRENCH, APPROXIMATELY 24" TO 36" OF SILT FENCE FABRIC SHOULD REMAIN EXPOSED.
LAY THE EXPOSED SILT FENCE ON THE UPSTREAM SIDE OF THE TRENCH TO CLEAR AN AREA FOR DRIVING IN THE POSTS. JUST DOWNSTREAM OF THE TRENCH, DRIVE POSTS INTO THE GROUND TO A DEPTH OF AT LEAST 24". PLACE POSTS NO MORE THAN 4' APART.
ATTACH THE SILT FENCE TO THE ANCHORED POST WITH STAPLES, WIRE, ZIP TIES, OR NAILS.

LIST OF COMMON PLACEMENT/INSTALLATION MISTAKES TO AVOID:

WATER SHOULD FLOW THROUGH A SILT FENCE DITCH CHECK-NOT OVER IT. PLACE SILT FENCE IN DITCHES WHERE IT IS UNLIKELY THAT IT WILL BE OVERTOPPED. SILT FENCE INSTALLATIONS QUICKLY DETERIORATE WHEN WATER OVERTOPS THEM.
DO NOT PLACE SILT FENCE POSTS ON THE UPSTREAM SIDE OF THE SILT FENCE FABRIC. IN THIS CONFIGURATION, THE FORCE OF THE WATER IS NOT RESTRICTED BY THE POSTS, BUT ONLY BY THE STAPLES (WIRE, ZIP TIES, NAILS, ETC.). THE SILT FENCE WILL RIP AND FAIL.
DO NOT PLACE A SILT FENCE DITCH CHECK DIRECTLY IN FRONT OF A CULVERT OUTLET. IT WILL NOT STAND UP TO THE CONCENTRATED FLOW.
DO NOT PLACE SILT FENCE DITCH CHECKS IN DITCHES THAT WILL LIKELY EXPERIENCE HIGH FLOWS. THEY WILL NOT STAND UP TO CONCENTRATED FLOW.
FOLLOW PRESCRIBED DITCH CHECK SPACING GUIDELINES. IF SPACING GUIDELINES ARE EXCEEDED, EROSION WILL OCCUR BETWEEN THE DITCH CHECKS.
DO NOT ALLOW WATER TO FLOW AROUND THE DITCH CHECK. MAKE SURE THAT THE DITCH CHECK IS LONG ENOUGH SO THAT THE GROUND LEVEL AT THE ENDS OF THE FENCE IS HIGHER THAN THE LOW POINT ON THE TOP OF THE FENCE.
DO NOT PLACE SILT FENCE DITCH CHECKS IN CHANNELS WITH SHALLOW SOILS UNDERLAIN BY ROCK. IF THE CHECK IS NOT ANCHORED SUFFICIENTLY, IT WILL WASH OUT.

INSPECTION AND MAINTENANCE:

SILT FENCE DITCH CHECKS SHOULD BE INSPECTED EVERY 7 DAYS AND WITHIN 24 HOURS OF A RAINFALL OF 1/2" OR MORE. THE FOLLOWING IS A LIST OF QUESTIONS THAT SHOULD BE ADDRESSED DURING EACH INSPECTION:

DOES WATER FLOW AROUND THE DITCH CHECK?
DOES WATER FLOW UNDER THE DITCH CHECK?
DOES THE SILT FENCE SAG EXCESSIVELY?
HAS THE SILT FENCE TORN OR BECOME DETACHED FROM THE POSTS?
DOES SEDIMENT NEED TO BE REMOVED FROM BEHIND THE DITCH CHECK?

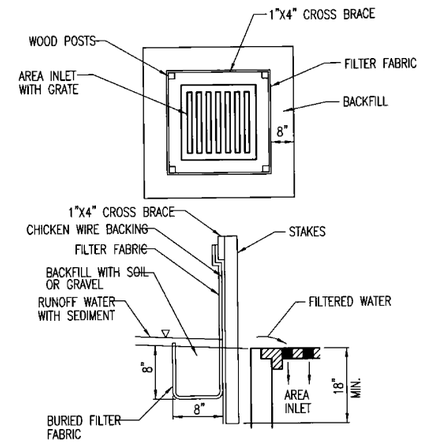


## SILT FENCE BARRIERS FOR AREA INLETS

(INLET PROTECTION)

MATERIAL SPECIFICATION:

SILT FENCE FABRIC SHOULD CONFORM TO THE AASHTO M288 96 SILT FENCE SPECIFICATION.
THE WIRE OR POLYMERIC MESH BACKING USED TO HELP SUPPORT THE SILT FENCE FABRIC SHOULD CONFORM TO THE AASHTO M288 96 SILT FENCE SPECIFICATION.
THE POSTS USED TO SUPPORT THE SILT FENCE FABRIC SHOULD BE A HARDWOOD MATERIAL WITH THE FOLLOWING MINIMUM DIMENSIONS: 2" SQUARE (NOMINAL) BY 4' LONG.
THE MATERIAL USED TO FRAME THE TOPS OF THE POSTS SHOULD BE 1" BY 4" BOARDS.
SILT FENCE FABRIC AND SUPPORT BACKING SHOULD BE ATTACHED TO THE WOODEN POSTS AND FRAME WITH STAPLES, WIRE, ZIP TIES, OR NAILS.

PLACEMENT:

PLACE A SILT FENCE DROP INLET BARRIER IN A LOCATION WHERE IT IS UNLIKELY TO BE OVERTOPPED.
WATER SHOULD FLOW THROUGH SILT FENCE, NOT OVER IT. SILT FENCE BARRIERS FOR AREA INLETS OFTEN FAIL WHEN REPEATEDLY OVERTOPPED.
WHEN USED AS A BARRIER FOR AREA INLETS, SILT FENCE FABRIC AND POSTS MUST BE SUPPORTED AT THE TOP BY A WOODEN FRAME.
WHEN A SILT FENCE BARRIER FOR AREA INLETS IS LOCATED NEAR AN INLET THAT HAS STEEP APPROACH SLOPES, THE STORAGE CAPACITY BEHIND THE BARRIER IS DRASTICALLY REDUCED. TIMELY REMOVAL OF SEDIMENT MUST OCCUR FOR A BARRIER TO OPERATE PROPERLY IN THIS LOCATION.

PROPER INSTALLATION METHOD:

EXCAVATE A TRENCH AROUND THE PERIMETER OF THE AREA INLET THAT IS AT LEAST 8" DEEP BY 8" WIDE.
DRIVE POSTS TO A DEPTH OF AT LEAST 18" AROUND THE PERIMETER OF THE AREA INLET.
THE DISTANCE BETWEEN POSTS SHOULD BE 4' OR LESS. IF THE DISTANCE BETWEEN TWO ADJACENT CORNER POSTS IS MORE THAN 4', ADD ANOTHER POST(S) BETWEEN THEM.
CONNECT THE TOPS OF ALL THE POSTS WITH A WOODEN FRAME MADE OF 1" BY 4" BOARDS. USE NAILS OR SCREWS FOR FASTENING.
ATTACH THE WIRE OR POLYMERIC-MESH BACKING TO THE OUTSIDE OF THE POST/FRAME STRUCTURE WITH STAPLES, WIRE, ZIP TIES, OR NAILS.
ROLL OUT A CONTINUOUS LENGTH OF SILT FENCE FABRIC LONG ENOUGH TO WRAP AROUND THE PERIMETER OF THE AREA INLET. ADD MORE LENGTH FOR OVERLAPPING THE FABRIC JOINT. PLACE THE EDGE OF THE FABRIC IN THE TRENCH, STARTING AT THE OUTSIDE EDGE OF THE TRENCH. LINE ALL THREE SIDES OF THE TRENCH WITH THE FABRIC. BACKFILL OVER THE FABRIC IN THE TRENCH WITH THE EXCAVATED SOIL AND COMPACT. AFTER FILLING THE TRENCH, APPROXIMATELY 24" TO 36" OF SILT FENCE FABRIC SHOULD REMAIN EXPOSED.
ATTACH THE SILT FENCE TO THE OUTSIDE OF THE POST/FRAME STRUCTURE WITH STAPLES, WIRE, ZIP TIES, OR NAILS. THE JOINT SHOULD BE OVERLAPPED TO THE NEXT POST.

NOTE: WHEN A SILT FENCE BARRIER FOR AREA INLET IS PLACED IN A SHALLOW MEDIAN DITCH, MAKE SURE THAT THE TOP OF THE BARRIER IS NOT HIGHER THAN THE PAVED ROAD. IN THIS CONFIGURATION, WATER MAY SPREAD ONTO THE ROADWAY CAUSING A HAZARDOUS CONDITION.

LIST OF COMMON PLACEMENT/INSTALLATION MISTAKES TO AVOID:

WATER SHOULD FLOW THROUGH A SILT FENCE BARRIER FOR AREA INLET-NOT OVER IT. PLACE A SILT FENCE BARRIER FOR AREA INLET IN A LOCATION WHERE IT IS UNLIKELY TO BE OVERTOPPED. SILT FENCE BARRIER FOR AREA INLETS OFTEN FAIL WHEN REPEATEDLY OVERTOPPED.
DO NOT PLACE POSTS ON THE OUTSIDE OF THE SILT FENCE BARRIER FOR AREA INLET. IN THIS CONFIGURATION, THE FORCE OF THE WATER IS NOT RESISTED BY THE POSTS, BUT ONLY BY THE STAPLES (WIRE, ZIP TIES, NAILS, ETC.). THE SILT FENCE WILL RIP AND FAIL.
DO NOT INSTALL SILT FENCE BARRIER FOR AREA INLETS WITHOUT FRAMING THE TOP OF THE POSTS. THE CORNER POSTS AROUND AREA INLETS ARE STRESSED IN TWO DIRECTIONS WHEREAS A NORMAL SILT FENCE IS ONLY STRESSED IN ONE DIRECTION. THIS ADDED STRESS REQUIRES MORE SUPPORT.

INSPECTION AND MAINTENANCE:

SILT FENCE BARRIER FOR AREA INLETS SHOULD BE INSPECTED EVERY 7 DAYS AND WITHIN 24 HOURS OF A RAINFALL OF 1/2" OR MORE. THE FOLLOWING IS A LIST OF QUESTIONS THAT SHOULD BE ADDRESSED DURING EACH INSPECTION:

DOES WATER FLOW UNDER THE SILT FENCE?
DOES THE SILT FENCE SAG EXCESSIVELY?
HAS THE SILT FENCE TORN OR BECOME DETACHED FROM THE POSTS?
DOES SEDIMENT NEED TO BE REMOVED FROM BEHIND THE AREA INLET BARRIER?

GARY L. JANZEN LICENSED 16294 KANSAS PROFESSIONAL ENGINEER
05/31/13

AS-BUILT PLANS - APRIL 2016

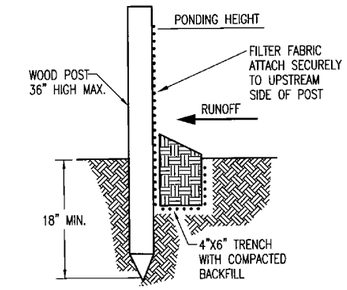


## SILT FENCE BARRIERS

MATERIAL SPECIFICATION:

SILT FENCE FABRIC SHOULD CONFORM TO THE AASHTO M288 96 SILT FENCE SPECIFICATION.
THE POSTS USED TO SUPPORT THE SILT FENCE FABRIC SHOULD BE A HARDWOOD MATERIAL WITH THE FOLLOWING MINIMUM DIMENSIONS: 2" SQUARE (NOMINAL) BY 4' LONG.
SILT FENCE FABRIC SHOULD BE ATTACHED TO THE WOODEN POSTS WITH STAPLES, WIRE, ZIP TIES, OR NAILS.

PLACEMENT:

A SLOPE BARRIER SHOULD BE USED AT THE TOE OF A SLOPE WHEN A DITCH DOES NOT EXIST. THE SLOPE BARRIER SHOULD BE PLACED ON NEARLY LEVEL GROUND 5' TO 10' AWAY FROM THE TOE OF A SLOPE. THE BARRIER IS PLACED AWAY FROM THE TOE OF THE SLOPE TO PROVIDE ADEQUATE STORAGE FOR SETTLING OUT SEDIMENT.
WHEN PRACTICABLE, SILT FENCE SLOPE BARRIERS SHOULD BE PLACED ALONG CONTOURS TO AVOID A CONCENTRATION OF FLOW.
SILT FENCE SLOPE BARRIERS CAN ALSO BE PLACED ALONG RIGHT-OF-WAY FENCE LINES TO KEEP SEDIMENT FROM CROSSING ONTO ADJACENT PROPERTY. WHEN PLACED IN THIS MANNER, THE SLOPE BARRIER WILL NOT LIKELY FOLLOW CONTOURS.

PROPER INSTALLATION METHOD:

EXCAVATE A TRENCH THE LENGTH OF THE PLANNED SLOPE BARRIER THAT IS 6" DEEP BY 4" WIDE.
MAKE SURE THAT THE TRENCH IS EXCAVATED ALONG A SINGLE CONTOUR. WHEN PRACTICABLE, SLOPE BARRIERS SHOULD BE PLACED ALONG CONTOURS TO AVOID A CONCENTRATION OF FLOW. PLACE THE SOIL ON THE UPSLOPE SIDE OF THE TRENCH FOR LATER USE.
ROLL OUT A CONTINUOUS LENGTH OF SILT FENCE FABRIC ON THE DOWNSLOPE SIDE OF THE TRENCH.
PLACE THE EDGE OF THE FABRIC IN THE TRENCH STARTING AT THE TOP UPSLOPE EDGE. LINE ALL THREE SIDES OF THE TRENCH WITH THE FABRIC. BACKFILL OVER THE FABRIC IN THE TRENCH WITH THE EXCAVATED SOIL AND COMPACT. AFTER FILLING THE TRENCH, APPROXIMATELY 24" TO 36" OF SILT-FENCE FABRIC SHOULD REMAIN EXPOSED.
LAY THE EXPOSED SILT FENCE UPSLOPE OF THE TRENCH TO CLEAR AN AREA FOR DRIVING IN THE POSTS. JUST DOWNSLOPE OF THE TRENCH, DRIVE POSTS INTO THE GROUND TO A DEPTH OF AT LEAST 18".
PLACE POSTS NO MORE THAN 4' APART.
ATTACH THE SILT FENCE TO THE ANCHORED POST WITH STAPLES, WIRE, ZIP TIES, OR NAILS.

LIST OF COMMON PLACEMENT/INSTALLATION MISTAKES TO AVOID:

WHEN PRACTICABLE, DO NOT PLACE SILT FENCE SLOPE BARRIERS ACROSS CONTOURS. SLOPE BARRIERS SHOULD BE PLACED ALONG CONTOURS TO AVOID A CONCENTRATION OF FLOW. WHEN THE FLOW CONCENTRATES, IT OVERTOPS THE BARRIER AND THE SILT FENCE SLOPE BARRIER QUICKLY DETERIORATES.
DO NOT PLACE SILT-FENCE POSTS ON THE UPSLOPE SIDE OF THE SILT FENCE FABRIC. IN THIS CONFIGURATION, THE FORCE OF THE WATER IS NOT RESTRICTED BY THE POSTS, BUT ONLY BY THE STAPLES (WIRE, ZIP TIES, NAILS, ETC.). THE SILT FENCE WILL RIP AND FAIL.
DO NOT PLACE SILT FENCE SLOPE BARRIERS IN AREAS WITH SHALLOW SOILS UNDERLAIN BY ROCK. IF THE BARRIER IS NOT SUFFICIENTLY ANCHORED, IT WILL WASH OUT.
SILT FENCE SLOPE BARRIERS MUST BE DUG INTO THE GROUND-SILT FENCE AT GROUND LEVEL DOES NOT WORK BECAUSE WATER WILL FLOW UNDERNEATH.

INSPECTION AND MAINTENANCE:

SILT FENCE SLOPE BARRIERS SHOULD BE INSPECTED EVERY 7 DAYS AND WITHIN 24 HOURS OF A RAINFALL OF 1/2" OR MORE. THE FOLLOWING IS A LIST OF QUESTIONS THAT SHOULD BE ADDRESSED DURING EACH INSPECTION:

ARE THERE ANY POINTS ALONG THE SLOPE BARRIER WHERE WATER IS CONCENTRATING?
DOES WATER FLOW UNDER THE SLOPE BARRIER?
DO THE SILT FENCES SAG EXCESSIVELY?
HAS THE SILT FENCE TORN OR BECOME DETACHED FROM THE POSTS?
DOES SEDIMENT NEED TO BE REMOVED FROM BEHIND THE SLOPE BARRIER?

REVISION DATE: MAY 2013

CITY OF WICHITA
PUBLIC WORKS & UTILITIES ENGINEERING DIVISION

SILT FENCE DITCH CHECK AND BARRIER DETAILS

CITY ENGINEER
GARY JANZEN, P.E.

| PROJECT NUMBER | OCA NUMBER | DATE |
|---|---|---|
| 1961 PPW | 607853 | |

CITY ENGINEER'S OFFICE
CITY HALL - SEVENTH FLOOR
455 NORTH MAIN STREET
WICHITA, KANSAS 67202-1620
(316) 268-4501

SHEET
7 OF 11

SW-502

NOTE: POINT A MUST BE HIGHER THAN POINT B
SO THAT WATER FLOWS OVER THE BALES AND
NOT AROUND THEM.

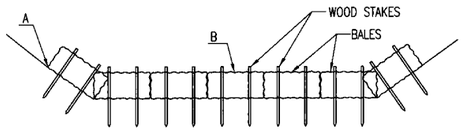


## STRAW BALE DITCH CHECKS

MATERIAL SPECIFICATION:

BALE DITCH CHECKS MAY BE CONSTRUCTED OF WHEAT STRAW, OAT STRAW, PRAIRIE HAY, OR BROMEGRASS HAY THAT IS FREE OF WEEDS DECLARED NOXIOUS BY THE KANSAS STATE BOARD OF AGRICULTURE.
THE STAKES USED TO ANCHOR THE BALES SHOULD BE A HARDWOOD MATERIAL WITH THE FOLLOWING MINIMUM DIMENSIONS: 2" SQUARE (NOMINAL) BY 4' LONG.
OPTIONAL: THE DOWNSTREAM SCOUR APRON SHOULD BE CONSTRUCTED OF A DOUBLE-NETTED STRAW EROSION-CONTROL BLANKET AT LEAST 6' WIDE.
OPTIONAL: THE METAL LANDSCAPE STAPLES USED TO ANCHOR THE EROSION-CONTROL BLANKET SHOULD BE AT LEAST 8" LONG.

PLACEMENT:

BALE DITCH CHECKS SHOULD BE PLACED PERPENDICULAR TO THE FLOWLINE OF THE DITCH.
THE DITCH CHECK SHOULD EXTEND FAR ENOUGH SO THAT THE GROUND LEVEL AT THE ENDS OF THE CHECK IS HIGHER THAN THE TOP OF THE LOWEST CENTER BALE. THIS PREVENTS WATER FROM FLOWING AROUND THE CHECK.
STRAW BALE DITCH CHECKS SHOULD NOT BE PLACED IN DITCHES WHERE HIGH FLOWS ARE EXPECTED. ROCK CHECKS SHOULD BE USED INSTEAD.
BALES SHOULD BE PLACED IN DITCHES WITH SLOPES OF 6% OR LESS. FOR SLOPES STEEPER THAN 6%, ROCK CHECKS SHOULD BE USED.
THE FOLLOWING TABLE PROVIDES CHECK SPACING FOR A GIVEN DITCH GRADE:

DITCH CHECK SPACING

| DITCH GRADE (%) | CHECK SPACING (FEET) |
|---|---|
| 0.5 | 200 |
| 1.0 | 200 |
| 2.0 | 100 |
| 3.0 | 65 |
| 4.0 | 50 |
| 5.0 | 40 |
| 6.0 | 30 |

PROPER INSTALLATION METHOD:

EXCAVATE A TRENCH PERPENDICULAR TO THE DITCH FLOWLINE THAT IS 4" DEEP AND A BALE'S WIDTH WIDE. EXTEND THE TRENCH IN A STRAIGHT LINE ALONG THE ENTIRE LENGTH OF THE PROPOSED DITCH CHECK. PLACE THE SOIL ON THE UPSTREAM SIDE OF THE TRENCH-IT WILL BE USED LATER.
OPTIONAL: ON THE DOWNSTREAM SIDE OF THE TRENCH, ROLL OUT A LENGTH OF EROSION-CONTROL BLANKET (SCOUR APRON) EQUAL TO THE LENGTH OF THE TRENCH. PLACE THE UPSTREAM EDGE OF THE EROSION-CONTROL BLANKET ALONG THE BOTTOM UPSTREAM EDGE OF THE TRENCH. THE EROSION CONTROL BLANKET SHOULD BE ANCHORED IN THE TRENCH WITH ONE ROW OF 8" LANDSCAPE STAPLES PLACED ON 18" CENTERS. THE REMAINDER OF THE EROSION-CONTROL BLANKET (THE PORTION THAT IS NOT LYING IN THE TRENCH) WILL SERVE AS THE DOWNSTREAM SCOUR APRON. THIS SECTION OF THE BLANKET SHOULD BE ANCHORED TO THE GROUND WITH 8" LANDSCAPE STAPLES PLACED AROUND THE PERIMETER OF THE BLANKET ON 18" CENTERS. THE REMAINDER OF THE BLANKET SHOULD BE ANCHORED USING TWO EVENLY SPACED ROWS OF 8" LANDSCAPE STAPLES ON 18" CENTERS PLACED PERPENDICULAR TO THE FLOWLINE OF THE DITCH.
PLACE THE BALES IN THE TRENCH, MAKING SURE THAT THEY ARE BUTTED TIGHTLY. TWO STAKES SHOULD BE DRIVEN THROUGH EACH BALE ALONG THE CENTERLINE OF THE DITCH CHECK, APPROXIMATELY 6" TO 8" IN FROM THE BALE ENDS. STAKES SHOULD BE DRIVEN AT LEAST 12" INTO THE GROUND.
ONCE ALL THE BALES HAVE BEEN INSTALLED AND ANCHORED, PLACE THE EXCAVATED SOIL AGAINST THE UPSTREAM SIDE OF THE CHECK AND COMPACT IT. THE COMPACTED SOIL SHOULD BE NO MORE THAN 3" TO 4" DEEP AND EXTEND UPSTREAM NO MORE THAN 24".

LIST OF COMMON PLACEMENT/INSTALLATION MISTAKES TO AVOID:

DO NOT PLACE A BALE DITCH CHECK DIRECTLY IN FRONT OF A CULVERT OUTLET. IT WILL NOT STAND UP TO THE CONCENTRATED FLOW.
DO NOT PLACE BALE DITCH CHECKS IN DITCHES THAT WILL LIKELY EXPERIENCE HIGH FLOWS. THEY WILL NOT STAND UP TO CONCENTRATED FLOW.
FOLLOW PRESCRIBED DITCH-CHECK SPACING GUIDELINES. IF SPACING GUIDELINES ARE EXCEEDED, EROSION WILL OCCUR BETWEEN THE DITCH CHECKS.
DO NOT ALLOW WATER TO FLOW AROUND THE DITCH CHECK. MAKE SURE THAT THE DITCH CHECK IS LONG ENOUGH SO THAT THE GROUND LEVEL AT THE ENDS OF THE CHECK IS HIGHER THAN THE TOP OF THE LOWEST CENTER BALE.
DO NOT PLACE BALE DITCH CHECKS IN CHANNELS WITH SHALLOW SOILS UNDERLAIN BY ROCK. IF THE CHECK IS NOT ANCHORED SUFFICIENTLY, IT WILL WASH OUT.
BALE DITCH CHECKS MUST BE DUG INTO THE GROUND. BALES AT GROUND LEVEL DO NOT WORK BECAUSE THEY ALLOW WATER TO FLOW UNDER THE CHECK.

INSPECTION AND MAINTENANCE:

BALE DITCH CHECKS SHOULD BE INSPECTED EVERY 7 DAYS AND WITHIN 24 HOURS OF A RAINFALL OF 1/2" OR MORE. THE FOLLOWING IS A LIST OF QUESTIONS THAT SHOULD BE ADDRESSED DURING EACH INSPECTION:

DOES WATER FLOW AROUND THE DITCH CHECK?
DOES WATER FLOW UNDER THE DITCH CHECK?
DOES WATER FLOW THROUGH SPACES BETWEEN ABUTTING BALES?
ARE ANY BALES AND/OR SCOUR APRONS (OPTIONAL) DISLODGED?
ARE BALES DECOMPOSING DUE TO AGE AND/OR WATER DAMAGE?
DOES SEDIMENT NEED TO BE REMOVED FROM BEHIND THE DITCH CHECK?

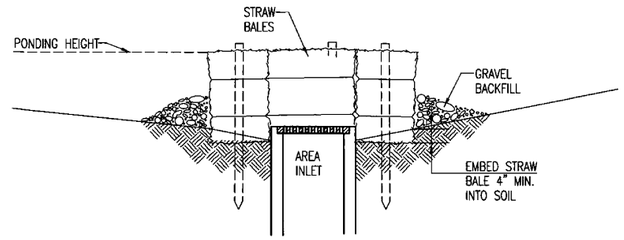


SECTION A-A

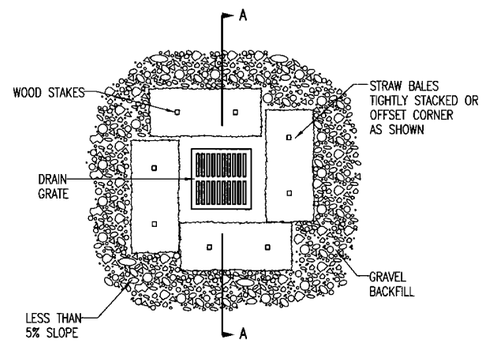


## STRAW BALE BARRIERS FOR AREA INLETS

(INLET PROTECTION)

MATERIAL SPECIFICATION:

BALE AREA INLET BARRIERS SHOULD BE CONSTRUCTED OF WHEAT STRAW, OAT STRAW, PRAIRIE HAY, OR BROMEGRASS HAY THAT IS FREE OF WEEDS DECLARED NOXIOUS BY THE KANSAS STATE BOARD OF AGRICULTURE.
THE STAKES USED TO ANCHOR THE BALES SHOULD BE A HARDWOOD MATERIAL WITH THE FOLLOWING MINIMUM DIMENSIONS: 2" SQUARE (NOMINAL) BY 4' LONG.
TWINE SHOULD BE USED TO BIND BALES. THE USE OF WIRE BINDING IS PROHIBITED BECAUSE IT DOES NOT BIODEGRADE READILY.

PLACEMENT:

BALE AREA INLET BARRIERS SHOULD BE PLACED DIRECTLY AROUND THE PERIMETER OF A DROP INLET.
WHEN A BALE AREA INLET BARRIER IS LOCATED NEAR AN INLET THAT HAS STEEP APPROACH SLOPES, THE STORAGE CAPACITY BEHIND THE BARRIER IS DRASTICALLY REDUCED. TIMELY REMOVAL OF SEDIMENT MUST OCCUR FOR A BARRIER TO OPERATE PROPERLY IN THIS LOCATION.

PROPER INSTALLATION METHOD:

EXCAVATE A TRENCH AROUND THE PERIMETER OF THE AREA INLET THAT IS AT LEAST 4" DEEP BY A BALE'S WIDTH WIDE.
PLACE THE BALES IN THE TRENCH, MAKING SURE THAT THEY ARE BUTTED TIGHTLY. SOME BALES MAY NEED TO BE SHORTENED TO FIT INTO THE TRENCH AROUND THE AREA INLET. TWO STAKES SHOULD BE DRIVEN THROUGH EACH BALE, APPROXIMATELY 6" TO 8" IN FROM THE BALE ENDS.
STAKES SHOULD BE DRIVEN AT LEAST 12" INTO THE GROUND.
ONCE ALL THE BALES HAVE BEEN INSTALLED AND ANCHORED, PLACE THE EXCAVATED SOIL AGAINST THE RECEIVING SIDE OF THE BARRIER AND COMPACT IT. THE COMPACTED SOIL SHOULD BE NO MORE THAN 3" TO 4" DEEP.
NOTE: WHEN A BALE AREA INLET BARRIER IS PLACED IN A SHALLOW MEDIAN DITCH, MAKE SURE THAT THE TOP OF THE BARRIER IS NOT HIGHER THAN THE PAVED ROAD. IN THIS CONFIGURATION, WATER MAY SPREAD ONTO THE ROADWAY CAUSING A HAZARDOUS CONDITION.

LIST OF COMMON PLACEMENT INSTALLATION MISTAKES TO AVOID:

BALES SHOULD BE PLACED DIRECTLY AGAINST THE PERIMETER OF THE AREA INLET. THIS ALLOWS OVERTOPPING WATER TO FLOW DIRECTLY INTO THE INLET INSTEAD OF ONTO NEARBY SOIL CAUSING SCOUR.
BALE AREA INLET BARRIERS MUST BE DUG INTO THE GROUND. BALES AT GROUND LEVEL DO NOT WORK BECAUSE THEY ALLOW WATER TO FLOW UNDER THE BARRIER.

INSPECTION AND MAINTENANCE:

BALE AREA INLET BARRIERS SHOULD BE INSPECTED EVERY 7 DAYS AND WITHIN 24 HOURS OF A RAINFALL 1/2" OR MORE. THE FOLLOWING IS A LIST OF QUESTIONS THAT SHOULD BE ADDRESSED DURING EACH INSPECTION:

DOES WATER FLOW UNDER THE AREA INLET BARRIER?
DOES WATER FLOW THROUGH SPACES BETWEEN ABUTTING BALES?
ARE ANY BALES DISLODGED?
ARE BALES DECOMPOSING DUE TO AGE AND/OR WATER DAMAGE?
DOES SEDIMENT NEED TO BE REMOVED FROM BEHIND THE AREA INLET BARRIER?

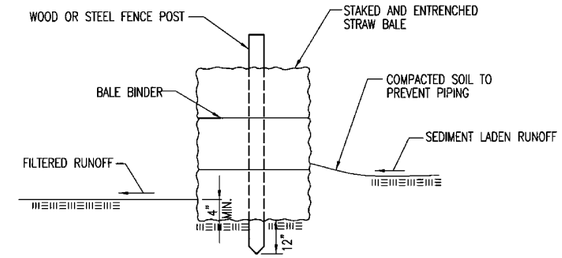


## STRAW BALE BARRIERS

MATERIAL SPECIFICATION:

BALE SLOPE BARRIERS MAY BE CONSTRUCTED OF WHEAT STRAW, OAT STRAW, PRAIRIE HAY, OR BROMEGRASS HAY THAT IS FREE OF WEEDS DECLARED NOXIOUS BY THE KANSAS STATE BOARD OF AGRICULTURE.
THE STAKES USED TO ANCHOR THE BALES SHOULD BE A HARDWOOD MATERIAL WITH THE FOLLOWING MINIMUM DIMENSIONS: 2" SQUARE (NOMINAL) BY 4' LONG.
TWINE SHOULD BE USED TO BIND BALES. THE USE OF WIRE BINDING IS PROHIBITED BECAUSE IT DOES NOT BIODEGRADE READILY.

PLACEMENT:

A SLOPE BARRIER SHOULD BE USED AT THE TOE OF A SLOPE WHEN A DITCH DOES NOT EXIST. THE SLOPE BARRIER SHOULD BE PLACED ON NEARLY LEVEL GROUND 5' TO 10' AWAY FROM THE TOE OF A SLOPE. THE BARRIER IS PLACED AWAY FROM THE TOE OF THE SLOPE TO PROVIDE ADEQUATE STORAGE FOR SETTLING OUT SEDIMENT.
WHEN PRACTICABLE, BALE SLOPE BARRIERS SHOULD BE PLACED ALONG CONTOURS TO AVOID A CONCENTRATION OF FLOW.
BALE SLOPE BARRIERS CAN ALSO BE PLACED ALONG RIGHT-OF-WAY FENCE LINES TO KEEP SEDIMENT FROM CROSSING ONTO ADJACENT PROPERTY. WHEN PLACED IN THIS MANNER, THE SLOPE BARRIER WILL NOT LIKELY FOLLOW CONTOURS.

PROPER INSTALLATION METHOD:

EXCAVATE A TRENCH THE LENGTH OF THE PLANNED SLOPE BARRIER THAT IS 4" DEEP AND A BALE'S WIDTH WIDE. MAKE SURE THAT THE TRENCH IS EXCAVATED ALONG A SINGLE CONTOUR. WHEN PRACTICABLE, SLOPE BARRIERS SHOULD BE PLACED ALONG CONTOURS TO AVOID A CONCENTRATION OF FLOW. PLACE THE SOIL ON THE UPSLOPE SIDE OF THE TRENCH FOR LATER USE.
PLACE THE BALES IN THE TRENCH, MAKING SURE THAT THEY ARE BUTTED TIGHTLY. TWO STAKES SHOULD BE DRIVEN THROUGH EACH BALE ALONG THE CENTERLINE OF THE DITCH CHECK, APPROXIMATELY 6" TO 8" IN FROM THE BALE ENDS. STAKES SHOULD BE DRIVEN AT LEAST 12" INTO THE GROUND.
ONCE ALL THE BALES HAVE BEEN INSTALLED AND ANCHORED, PLACE THE EXCAVATED SOIL AGAINST THE UPSLOPE SIDE OF THE CHECK AND COMPACT IT. THE COMPACTED SOIL SHOULD BE NO MORE THAN 3" TO 4" DEEP.

LIST OF COMMON PLACEMENT/INSTALLATION MISTAKES TO AVOID:

WHEN PRACTICAL, DO NOT PLACE BALE SLOPE BARRIERS ACROSS CONTOURS. SLOPE BARRIERS SHOULD BE PLACED ALONG CONTOURS TO AVOID A CONCENTRATION OF FLOW. CONCENTRATED FLOW OVER A SLOPE BARRIER CREATES A SCOUR HOLE ON THE DOWNSLOPE SIDE OF THE BARRIER. THE SCOUR HOLE EVENTUALLY UNDERMINES THE BALES AND THE BARRIER FAILS.
DO NOT PLACE BALE SLOPE BARRIERS IN AREAS WITH SHALLOW SOILS UNDERLAIN BY ROCK. IF THE BARRIER IS NOT ANCHORED SUFFICIENTLY, IT WILL WASH OUT.
BALE SLOPE BARRIERS MUST BE DUG INTO THE GROUND. BALES AT GROUND LEVEL DO NOT WORK BECAUSE THEY ALLOW WATER TO FLOW UNDER THE BARRIER.

INSPECTION AND MAINTENANCE:

BALE SLOPE BARRIERS SHOULD BE INSPECTED EVERY 7 DAYS AND WITHIN 24 HOURS OF A RAINFALL OF 1/2" OR MORE. THE FOLLOWING IS A LIST OF QUESTIONS THAT SHOULD BE ADDRESSED DURING EACH INSPECTION:

ARE THERE ANY POINTS ALONG THE SLOPE BARRIER WHERE WATER IS CONCENTRATING?
DOES WATER FLOW UNDER THE SLOPE BARRIER?
DOES WATER FLOW THROUGH SPACES BETWEEN ABUTTING BALES?
ARE ANY BALES DISLODGED?
ARE BALES DECOMPOSING DUE TO AGE AND/OR WATER DAMAGE?
DOES SEDIMENT NEED TO BE REMOVED FROM BEHIND THE SLOPE BARRIER?

REVISION DATE: MAY 2013

GARY L. JANZEN
LICENSED
16294
KANSAS
PROFESSIONAL ENGINEER
05/30/13

AS-BUILT PLANS - APRIL 2016

CITY OF WICHITA
PUBLIC WORKS & UTILITIES
ENGINEERING DIVISION

STRAW BALE DITCH CHECK AND BARRIER DETAILS

CITY ENGINEER
GARY JANZEN, P.E.

| PROJECT NUMBER | OCA NUMBER | DATE |
|---|---|---|
| 1961 PPW | 607853 | |

CITY ENGINEER'S OFFICE
CITY HALL - SEVENTH FLOOR
455 NORTH MAIN STREET
WICHITA, KANSAS 67202-1620
(316) 268-4501

SHEET
8 OF 11

SW-503

GENERAL NOTES

1. THIS SHEET IS INTENDED TO PROVIDE GUIDELINES AS TO WHAT TYPES OF EROSION CONTROL DEVICES WILL BE INSTALLED DURING THE CONSTRUCTION PROCESS. CONTRACTORS ARE EXPECTED TO BID PROJECTS ACCORDINGLY.

2. EROSION CONTROL DEVICES MUST BE MAINTAINED BY THE CONTRACTOR THROUGHOUT THE CONSTRUCTION PROCESS AND UNTIL THE DISTURBED EARTH IS RESTABILIZED.

3. IF THE PROJECT WILL DISTURB 1 ACRE OR MORE, A FEDERAL/STATE NPDES STORMWATER PERMIT IS REQUIRED. A DETAILED STORMWATER POLLUTION PREVENTION PLAN, IS REQUIRED. THE EROSION CONTROL DEVICES SHOWN ON THIS SHEET ARE CONSIDERED TO BE THE MINIMUM TO BE SHOWN IN THE POLLUTION PREVENTION PLAN.

4. FOR PROJECTS DISTURBING LESS THAN 1 ACRE, CONTRACTORS ARE ENCOURAGED TO PREPARE STORMWATER POLLUTION PREVENTION PLANS PRIOR TO CONSTRUCTION. EROSION CONTROL DEVICES MUST BE USED ON ALL PROJECTS.

5. FAILURE TO USE AND MAINTAIN EROSION CONTROL DEVICES IS A VIOLATION OF SECTION 16.32 OF THE CITY CODE AND WILL SUBJECT THE CONTRACTOR TO THE PENALTIES PROVIDED FOR THEREIN.

6. THE APPLICATION OF EROSION CONTROL DEVICES SHOWN ON THIS SHEET IS FOR SITUATIONS NORMALLY ENCOUNTERED. FROM TIME TO TIME, SITUATIONS WILL ARISE THAT MAY REQUIRE A DIFFERENT DEVICE OTHER THAN THOSE SHOWN. EROSION CONTROL DEVICES, OTHER THAN THOSE SHOWN, MAY BE UTILIZED AS LONG AS THEY ARE EFFECTIVE AND MAINTAINED.

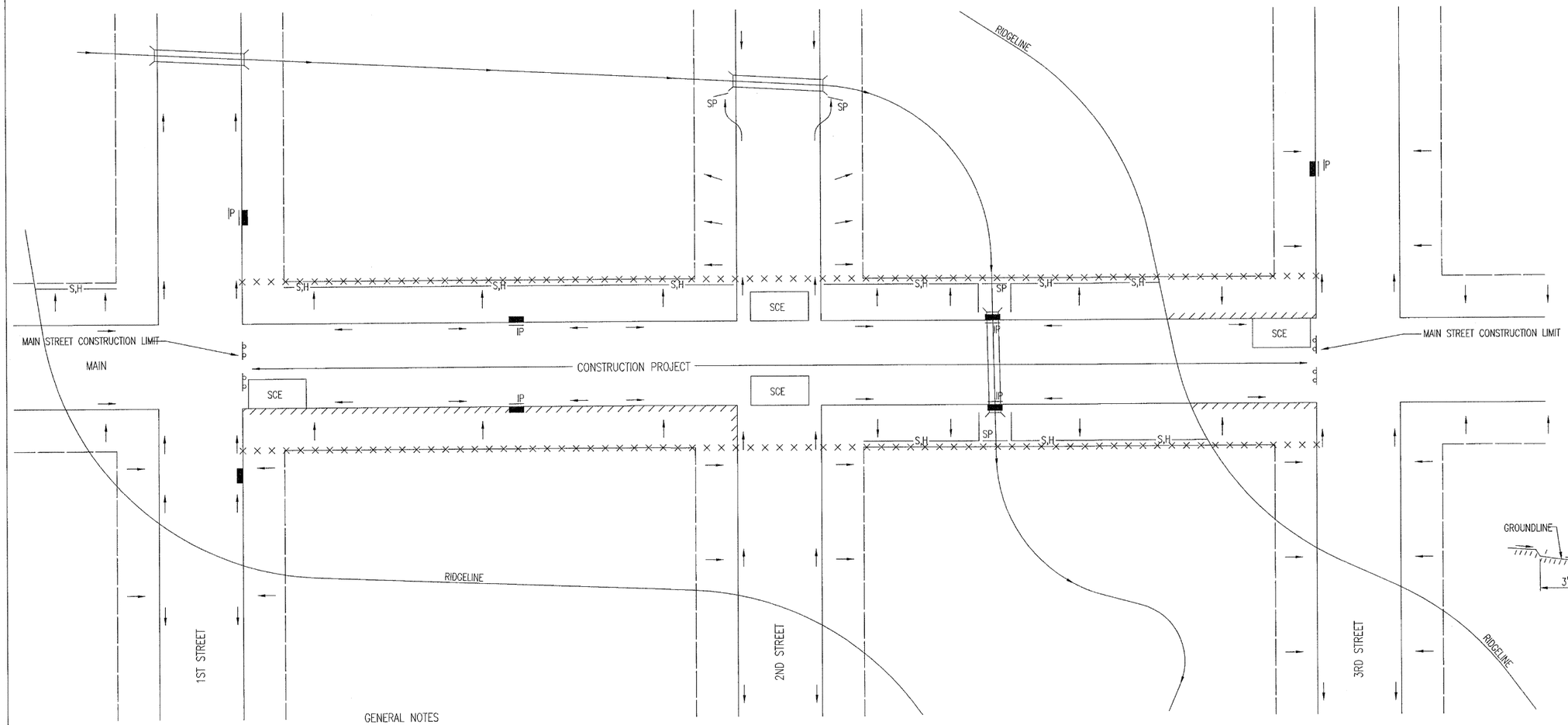


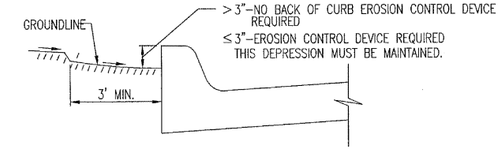


## CURB BACKFILL DETAIL

THIS IS A TEMPORARY MEASURE ONLY, WHEN APPROVED BY THE PROJECT ENGINEER. THE DIRT GRADE BEHIND THE CURB SHALL BE BROUGHT TO THE TOP OF CURB, WITH TEMPORARY EROSION CONTROL MAT OR PERMANENT VEGETATION PLACED, PRIOR TO THE COMPLETION OF ALL PROJECTS.

## LEGEND

| | |
|---|---|
| ——— | R–O–W LIMITS |
| → | DRAINAGE FLOW PATH |
| × × × × × | R/W LIMIT WITHIN CONSTRUCTION LIMIT |
| ▬ | STORM WATER INLETS |
| IP | INLET PROTECTION |
| —S,H— | SILT FENCE OR HAY BALE BARRIER |
| SP | STREAM PROTECTION |
| SCE | STABILIZED CONSTRUCTION ENTRANCE |
| /////// | BACK OF CURB PROTECTION |

GENERAL NOTES

1. THE INTENT OF ALL EROSION CONTROL DEVICES IS TO KEEP ALL SEDIMENT CONFINED TO THE CONSTRUCTION SITE, AND OUT OF ALL UNDERGROUND PIPES, DITCHES, LAKES, AND OTHER DRAINAGE FACILITIES, AND OFF OF STREETS.

2. THE POINT OF COMPLIANCE IS GENERALLY THE RIGHT–OF–WAY LINES WITHIN THE LIMITS OF CONSTRUCTION.

3. EROSION CONTROL DEVICES WILL BE REQUIRED AT ALL POINTS ALONG THE PROJECT WHERE DISTURBED EARTH CAN DRAIN ONTO PRIVATE PROPERTY.

4. INLET PROTECTION DEVICES WILL BE REQUIRED WHEREVER WATER CAN DRAIN OFF THE PROJECT SITE INTO AN INLET, INCLUDING ANY SIDE STREET INLETS.

5. EROSION CONTROL DEVICES SHALL BE INSTALLED AT CREEK CROSSINGS SO AS TO PREVENT SEDIMENT FROM ENTERING THEREIN.

6. STABILIZED CONSTRUCTION ENTRANCES SHALL BE PROVIDED, AS NEEDED, TO PREVENT MUD FROM TRACKING ONTO STREETS NOT UNDER CONSTRUCTION AND ON STREETS WITHIN THE PROJECT LIMITS IF TRAFFIC IS BEING MAINTAINED THROUGH THE PROJECT.

7. ANY MUD TRACKED ONTO STREETS MUST BE REMOVED AT THE END OF EACH WORK DAY.

8. THE CONTACTOR WILL BE REQUIRED TO PLACE EROSION CONTROL DEVICES BACK OF CURB, WHENEVER WATER CAN DRAIN OVER CURB, TO KEEP ERODED SOIL OUT OF THE GUTTERLINES, IN ACCORDANCE WITH THE FOLLOWING:
   A. THE DEVICE REQUIRED WILL BE APPROVED EROSION CONTROL MAT LISTED ON THE CITY'S APPROVED MATERIAL LIST. SAID BLANKET SHALL BE PLACED OVER THE APPROPRIATE SEED AND FERTILIZER, AS SPECIFIED IN THE PROJECT SPECIFICATIONS. (SEE SOIL EROSION BMPs – BACK OF CURB SEDIMENT BARRIER DETAILS)
   B. THIS DEVICE SHALL BE INSTALLED IMMEDIATELY WHENEVER THE CURB IS BACKFILLED TO WITHIN 3" OF THE TOP OF CURB. (SEE CURB BACKFILL DETAIL) OTHER BMP'S MAY BE REQUIRED AT LOCATIONS WHERE CONCENTRATED FLOW CARRIES SEDIMENT OVER THE CURB.
   C. ADDITIONALLY, OTHER EROSION CONTROL DEVICES (HAY BALES, SILT FENCE, ETC.) WILL BE INSTALLED AT LOCATIONS OF CONCENTRATED FLOW RESULTING IN SEDIMENT OVERRUNNING THE MAT.
   D. SHOULD THE PROJECT PLANS SPECIFY THAT THE RIGHT–OF–WAY IS TO BE SODDED, THE EXCELSIOR MAT WILL NOT BE REQUIRED SO LONG AS THE SOD IS PLACED WITHIN 48 HOURS AFTER CURB BACKFILL REACHES A HEIGHT OF 3" OR LESS FROM TOP OF CURB. (SEE CURB BACKFILL DETAIL)

GARY L. JANZEN LICENSED 16294 KANSAS PROFESSIONAL ENGINEER
06/05/15

AS-BUILT PLANS - APRIL 2016

REVISION: JUNE 2015

CITY OF WICHITA
PUBLIC WORKS & UTILITIES ENGINEERING DIVISION

STREET IMPROVEMENT PROJECTS

CITY ENGINEER
GARY JANZEN, P.E.

| PROJECT NUMBER | OCA NUMBER | DATE |
|---|---|---|
| 1961 PPW | 607853 | |

CITY ENGINEER'S OFFICE
CITY HALL - SEVENTH FLOOR
455 NORTH MAIN STREET
WICHITA, KANSAS 67202-1620
(316) 268-4501

SHEET
9 OF 11

SW-504

## PHASE 1 – INITIAL EARTHWORK AND UTILITIES (EXCEPT STORM SEWER)

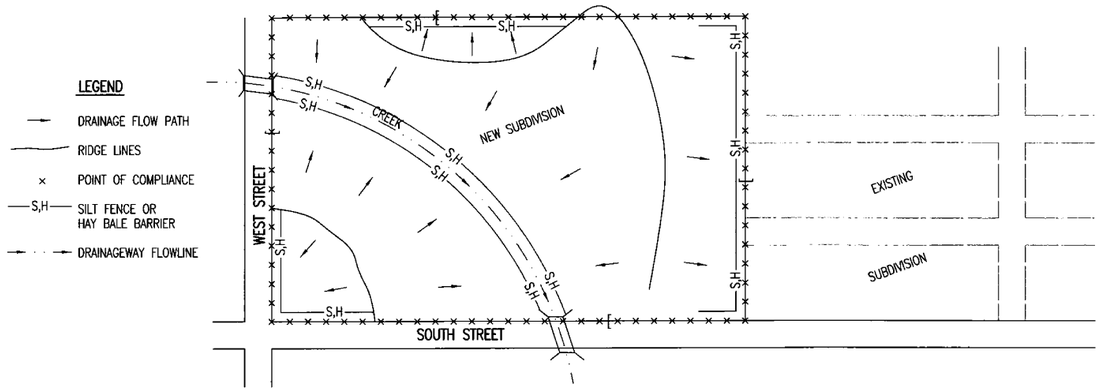


1. DURING THIS PHASE OF SUBDIVISION CONSTRUCTION, THE POINTS OF COMPLIANCE ARE THE PERIMETER BOUNDARIES AND ANY DRAINAGE WAYS OR STORM SEWERS DRAINING THROUGH OR FROM THE SITE. SHOULD LAKES BE CONSTRUCTED WITHIN THE SUBDIVISION THAT WILL DISCHARGE DURING STORMS, THEY ARE ALSO A POINT OF COMPLIANCE.
2. HAY BALES OR SILT FENCE MUST BE CONSTRUCTED ALONG THE PROPERTY LINE WHERE ON SITE WATER CAN DRAIN OFF THE PROPERTY. THESE EROSION CONTROL DEVICES WILL ALSO BE INSTALLED ALONG ANY DRAINAGE DITCH OR LAKE THAT CAN DISCHARGE.
3. SHOULD SILT OR SEDIMENT ENTER THE DITCHES OR STREETS ON THE ADJACENT BOUNDARY STREETS, APPROPRIATE EROSION CONTROL DEVICES WILL BE PLACED WITHIN THE SUBDIVISION TO PREVENT THIS.
4. ANY MUD TRACKED ONTO ADJACENT STREETS WILL BE REMOVED WITHIN 48 HOURS OR BY FRIDAY AT 6:00 PM, WHICHEVER IS EARLIER.
5. CONTRACTORS WORKING WITHIN THE SITE WILL NOT BE REQUIRED TO USE INDIVIDUAL EROSION CONTROL DEVICES AS LONG AS THOSE SPECIFIED ABOVE ARE IN PLACE AND EFFECTIVE. CONTRACTORS WORKING ON THE BOUNDARY LINE STREETS OR ON ADJACENT PROPERTIES TO EXTEND UTILITIES ARE EXPECTED TO USE EROSION CONTROL DEVICES AT THEIR WORK LOCATIONS, AS NEEDED.
6. UTILIZE STABILIZED CONSTRUCTION ENTRANCE AT ENTRANCE AND EXIT ONTO ANY EXISTING PUBLIC STREETS.
7. IF THE INITIAL EARTH WORK AND UTILITIES ARE DONE AS PART OF A PUBLIC IMPROVEMENT PROJECT, THESE EROSION CONTROL DEVICES WILL BE INSTALLED BY THE CONTRACTOR AS SPECIFIED IN THE INDIVIDUAL PROJECT CONTRACTS. THE CONTRACTOR WILL MAINTAIN THE DEVICES UNTIL COMPLETION OF THE CONTRACT, AT WHICH TIME THE DEVELOPER WILL ASSUME MAINTENANCE RESPONSIBILITIES. IF THESE CONTRACTS ARE NOT PUBLIC IMPROVEMENT PROJECTS, THE DEVELOPER WILL BE RESPONSIBLE FOR INSTALLING AND MAINTAINING THESE DEVICES.
8. WITHIN 14 DAYS OF COMPLETION OF EARTHWORK ACTIVITIES IN ANY GIVEN AREA, THAT AREA SHALL BE TEMPORARILY OR PERMANENTLY SEEDED AND MULCHED.

## PHASE 3 – STREET CONSTRUCTION

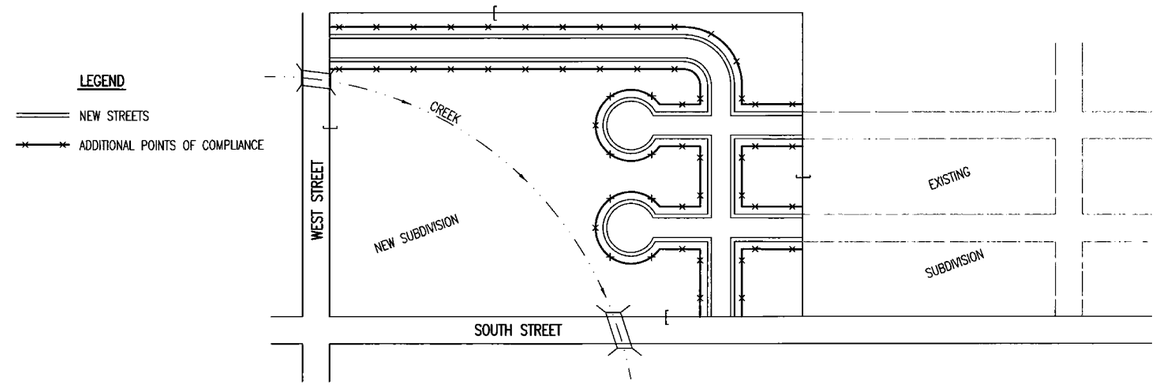


1. DURING THIS PHASE OF SUBDIVISION CONSTRUCTION, NEW STREETS ARE INSTALLED. ALL EROSION CONTROL DEVICES INSTALLED DURING PHASE 1 AND 2 MUST STILL BE MAINTAINED. THE POINT OF COMPLIANCE NOW SHIFTS TO THE BACK OF CURB ALONG EACH STREET.
2. CURB OPENING INLET PROTECTION:
   A. SUMP AREAS – INLET PROTECTION SHALL BE PROVIDED WHEN STREET SUBGRADE WORK IS COMPLETED.
   B. NON-SUMP LOCATIONS – PROVIDE INLET PROTECTION AS SOON AS BASE COURSE ASPHALT IS INSTALLED, BEFORE THE SURFACE COURSE LIFT.
3. EROSION CONTROL DEVICES WILL BE REQUIRED BACK OF CURB WHEREVER WATER CAN FLOW OVER THE CURB AND THE CURB HAS BEEN BACKFILLED TO WITHIN 3" OR LESS OF THE TOP OF CURB (SEE CURB BACKFILL DETAIL). FOR CURBS NOT YET ENTIRELY BACKFILLED (3" OR MORE BELOW TOP OF CURB), ADDITIONAL DEVICES WILL BE REQUIRED AT POINTS WHERE WATER BREAKS OVER CURB WHICH COULD RESULT IN THE PLACEMENT OF SEDIMENT IN THE GUTTER.
4. SEE DETAIL SHEET FOR BACK OF CURB PROTECTION.
5. THE BACK OF CURB PROTECTION SPECIFIED ON THIS PLAN MAY HAVE TO BE SUPPLEMENTED WITH HAY BALE OR SILT FENCE EROSION CONTROL DEVICES AT LOCATIONS WHERE CONCENTRATED FLOW RESULTS IN SEDIMENT BEING CARRIED OVER THE EXCELSIOR MATS.
6. THE STREET CONTRACTOR WILL BE RESPONSIBLE FOR INSTALLING BACK OF CURB EROSION CONTROL DEVICES.
7. THE INDIVIDUAL LOT OWNERS WILL BE RESPONSIBLE FOR MAINTAINING THE BACK OF CURB EROSION CONTROL DEVICES IN FRONT OF THEIR LOTS UNTIL SUCH TIME AS ADJACENT DISTURBED EARTH IS STABILIZED WITH GRASS OR SOD.

## PHASE 2 – INSTALLATION OF STORM SEWER

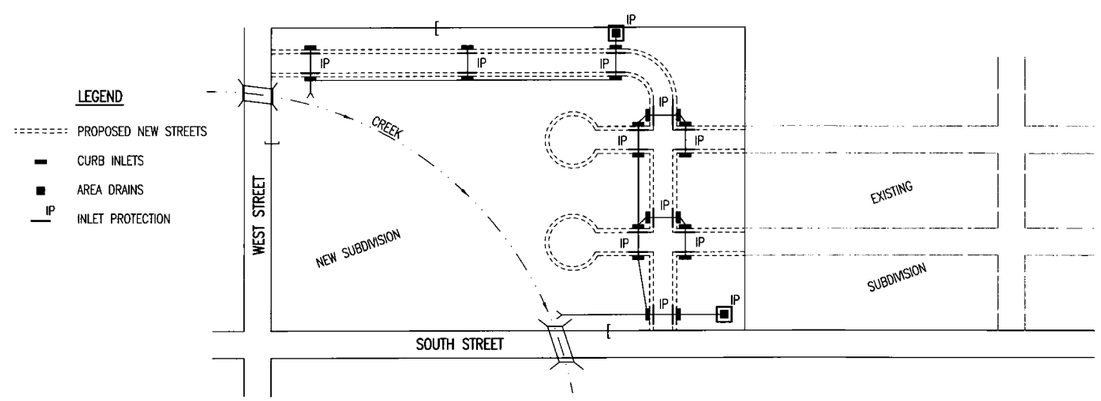


1. DURING THIS PHASE OF SUBDIVISION DEVELOPMENT, ALL EROSION CONTROL DEVICES REQUIRED IN PHASE 1 SHALL REMAIN IN PLACE AND BE MAINTAINED.
2. AS NEW STORM SEWERS, WITH INLETS, ARE INSTALLED, THE STORM SEWERS MUST NOW BE PROTECTED SO ALL NEW INLETS BECOME POINTS OF COMPLIANCE.
3. AREA DRAINS – AS SOON AS WATER CAN FLOW INTO THESE DRAINS, HAY BALE OR SILT FENCE PROTECTION WILL BE INSTALLED AROUND THEM.
4. CURB OPENING INLETS – AS SOON AS WATER CAN FLOW INTO THESE DRAINS, INLET PROTECTION DEVICES MUST BE INSTALLED. IF WATER CANNOT FLOW INTO CURB INLETS UNTIL STREET CONSTRUCTION IS COMPLETE, THEN STREET CONTRACTOR WILL INSTALL INLET PROTECTION. SEE PHASE 3 – STREET CONSTRUCTION.
5. THE STORM SEWER CONTRACTOR WILL BE RESPONSIBLE FOR INSTALLING THESE DEVICES.
6. THE SUBDIVISION DEVELOPER WILL MAINTAIN THESE EROSION CONTROL DEVICES ONCE INSTALLED.
7. ALL DISTURBED GROUND WILL BE FINAL GRADED AND TEMPORARILY OR PERMANENTLY SEEDED WITHIN 14 DAYS IF COMPLETION OF WORK IN ANY GIVEN PART OF THE SUBDIVISION.
8. ONCE ALL DISTURBED GROUND DRAINING TO AN INLET HAS BEEN RESTABILIZED WITH GRASS OR SOD, THE SUBDIVISION DEVELOPER WILL BE RESPONSIBLE FOR PERMANENTLY REMOVING THE INLET PROTECTION.

### GENERAL NOTES

1. THE INTENT OF ALL EROSION CONTROL DEVICES IS TO PREVENT ERODED SOIL FROM ENTERING DITCHES, STORM SEWERS, LAKES, STREETS OR ANY OTHER OTHER DRAINAGE FEATURE.
2. THIS SHEET IS INTENDED TO PROVIDE GUIDELINES AS TO WHAT TYPE OF EROSION CONTROL DEVICES WILL BE INSTALLED DURING THE CONSTRUCTION PROCESS. CONTRACTORS ARE EXPECTED TO BID PROJECTS ACCORDINGLY.
3. EROSION CONTROL DEVICES SHALL BE MAINTAINED DURING THE CONSTRUCTION PROCESS TO REMAIN EFFECTIVE. MAINTENANCE SHALL BE AS INDICATED ON SOIL EROSION BMP'S DETAIL SHEETS.
4. PERSONS DESTROYING EROSION CONTROL DEVICES SHALL BE RESPONSIBLE FOR IMMEDIATELY REPAIRING THEM OR INSTALLING SUITABLE REPLACEMENT DEVICES.
5. THE DEVELOPMENT OF ANY SUBDIVISION THAT DISTURBS 1 ACRE OR MORE WILL REQUIRE A FEDERAL/STATE NPDES STORMWATER PERMIT. THE PREPARATION OF A STORMWATER POLLUTION PREVENTION PLAN IS REQUIRED. EROSION CONTROL DEVICES ARE REQUIRED. THE DETAILS SHOWN ON THIS SHEET ARE THE MINIMUM STANDARDS TO BE SHOWN ON POLLUTION PREVENTION PLANS.
6. FOR SUBDIVISIONS SMALLER THAN 1 ACRE, SOIL EROSION DEVICES ARE REQUIRED. ALSO, DEVELOPERS AND CONTRACTORS ARE ENCOURAGED TO DEVELOP POLLUTION PREVENTION PLANS FOR EACH PROJECT PRIOR TO CONSTRUCTION.
7. FAILURE TO USE AND MAINTAIN SOIL EROSION DEVICES IS A VIOLATION OF SECTION 16.32 OF THE CITY CODE AND WILL SUBJECT THE SUBDIVISION DEVELOPER AND CONTRACTORS TO THE PENALTIES PROVIDED THEREIN.
8. THE APPLICATION OF EROSION CONTROL DEVICES SHOWN ON THIS SHEET IS FOR SITUATIONS NORMALLY ENCOUNTERED. FROM TIME TO TIME, SITUATIONS WILL ARISE THAT MAY REQUIRE DEVICES OTHER THAN THAT SHOWN. EROSION CONTROL DEVICES, OTHER THAN THOSE SHOWN, MAY BE UTILIZED SO LONG AS THEY ARE EFFECTIVE AND MAINTAINED.
9. A STABILIZED EARTH SURFACE IS DEFINED AS ONE THAT IS HARD SURFACED WITH CONCRETE, ASPHALT, OR THE LIKE, OR ONE ON WHICH 70% OF THE GRASS HAS GERMINATED ON THE ENTIRE SURFACE.

SEE DETAIL SHEET FOR BACK OF CURB PROTECTION DETAIL

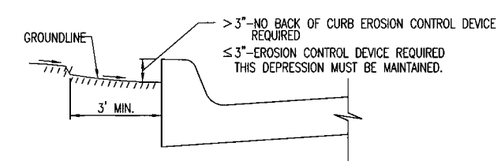


### CURB BACKFILL DETAIL (STREET CONSTRUCTION ONLY)

THIS IS A TEMPORARY MEASURE ONLY, WHEN APPROVED BY THE PROJECT ENGINEER. THE DIRT GRADE BEHIND THE CURB SHALL BE BROUGHT TO THE TOP OF CURB, WITH TEMPORARY EROSION CONTROL MAT OR PERMANENT VEGETATION PLACED, PRIOR TO THE COMPLETION OF ALL PROJECTS.

REVISION DATE: MAY 2013

GARY L. JANZEN LICENSED 16294 KANSAS PROFESSIONAL ENGINEER 05.13.13

AS-BUILT PLANS - APRIL 2016

CITY OF WICHITA
PUBLIC WORKS & UTILITIES ENGINEERING DIVISION

SUBDIVISION DEVELOPMENT PROCESS

CITY ENGINEER
GARY JANZEN, P.E.

| PROJECT NUMBER | OCA NUMBER | DATE |
|---|---|---|
| 1961 PPW | 607853 | |

CITY ENGINEER'S OFFICE
CITY HALL - SEVENTH FLOOR
455 NORTH MAIN STREET
WICHITA, KANSAS 67202-1620
(316) 268-4501

SHEET
10 OF 11

SW-505

# FINAL PLANNED UNIT DEVELOPMENT PLAN

# CORNERSTONE OFFICE SECOND ADDITION

## AN ADDITION TO ANDOVER, BUTLER COUNTY, KANSAS

**A replat of a portion of Lot 1, Block 2, and a portion of Reserve "C", Cornerstone Commercial Addition, Final Planned Unit Development, AND ALSO A replat of Reserve D, Cornerstone Office Addition, Final Planned Unit Development**

Lying in a portion of the Southwest Quarter, Section 6, Township 27 South, Range 3 East, of the 6th Principal Meridian, Andover, Butler County, Kansas, and being part of the Cornerstone Preliminary Planned Unit Development Plan

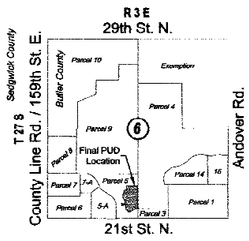


**VICINITY MAP**

| MINIMUM PAD ELEVATIONS LOWEST OPENINGS | | |
|---|---|---|
| LOTS *inclusive* | BLOCK | ELEVATION *NGVD 29* |
| 1 | 1 | 1352.0 |
| 1 | 2 | 1349.7 |

N

1"=40' / 1 : 480

0 40 80

Basis of Bearing: Kansas coordinate system of 1983 south zone bearing of N01°17'44"W along the east line of the Southwest 1/4, Section 6, T27S, R3E, 6th P.M.

This plat is surveyed and platted on NAD83 using Kansas state plane south zone coordinates, modified to the surface, having a combined adjustment scale factor of 1.000120014

JAMES C. McCLURE LICENSED 12/21/15 LS-1251 KANSAS LAND SURVEYOR

## LEGEND

Date of Survey: June 2nd, 20___

- △ = Section corner monument found
- ⊖ = Found ⅝" rebar w/ MKEC CLS 39 id. cap
- ⊗ = Found ½" rebar w/o id. cap
- ⊗ = Not Found or set
- ● = Set ⅝" rebar w/ MKEC CLS 39 id. cap
- (M) = Measured
- (P) = Platted
- (CM) = Calculated from measured

## BENCH MARK

BM #1 ⊕ Chiseled square on top of east curb of Keystone Parkway near south light pole of 3 light poles, 560' ± north of centerline 21st Street North.

Elevation = 1353.13 (NGVD 88)

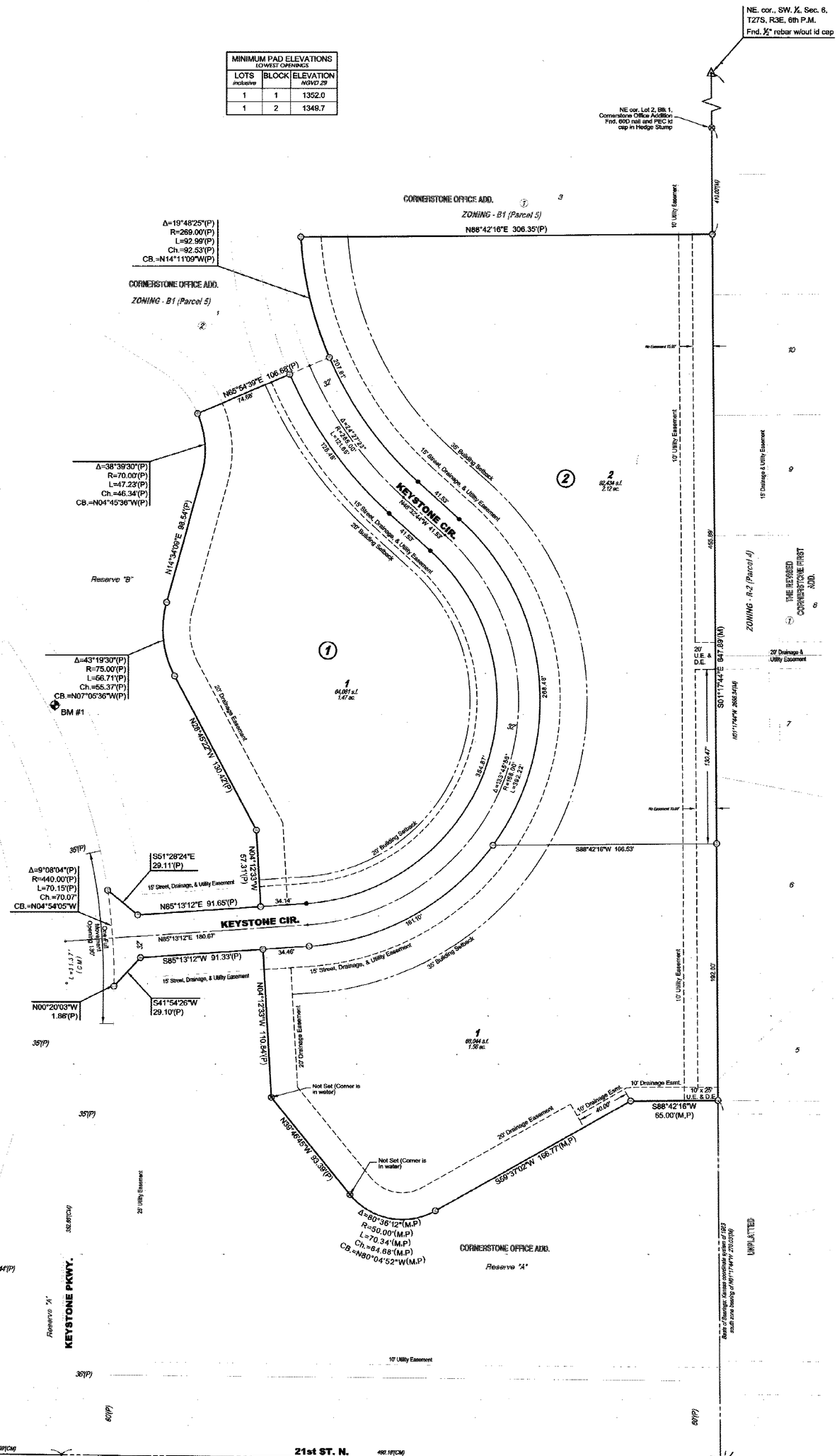


MKEC
Wichita, KS • 316.684.9600