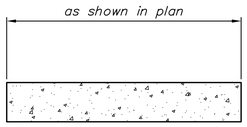

SIDEWALK SECTION
(Concrete Sidewalk 4")

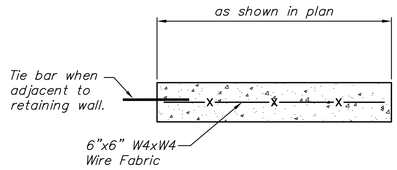

SIDEWALK SECTION
(Concrete Sidewalk 6")

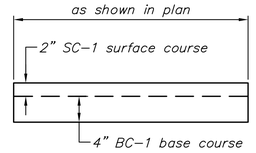

SIDEWALK SECTION
(AC Pavement 6" (4" bit. base))

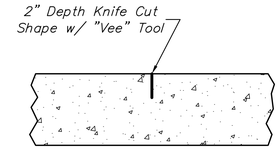

CONTRACTION JOINT (C.J.)

No Sawn Joints Will Be Allowed

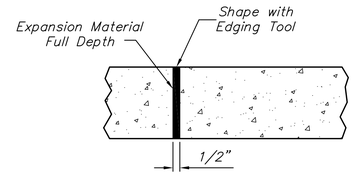

EXPANSION JOINT (E.J.)

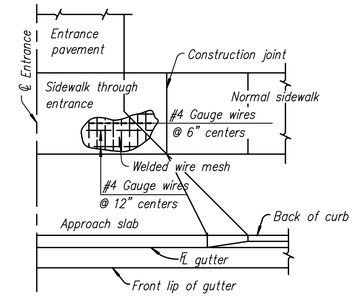

REINFORCEMENT DIAGRAM
SIDEWALK THROUGH ENTRANCE

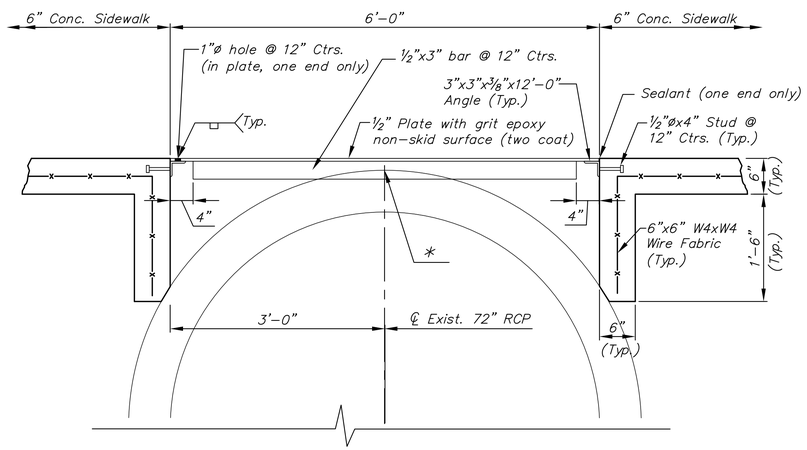

LONGITUDINAL SIDEWALK SECTION
AT 72" RCP CROSSING

See Sh. 19 for plan

* Note: The Engineer shall survey the top of the storm water sewer pipe (72" RCP) at five (5) foot intervals and determine if vertical adjustments to the plate cover are required. If required clearances are inadequate, adjusted elevation and wall geometry will be provided to the Contractor. This change will not constitute a monetary change order.

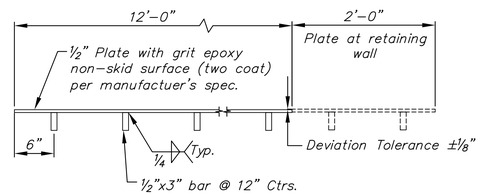

Section through Plate

Steel Plate and Miscellaneous Structural Steel: This shall be paid by sq. ft. of floor area. This will constitute the only compensation for "Structural Steel (Merchant Quality)", as specified by KDOT Standard Specifications Section 712. Painting is not required. See Bridge Quantities Sh. 14

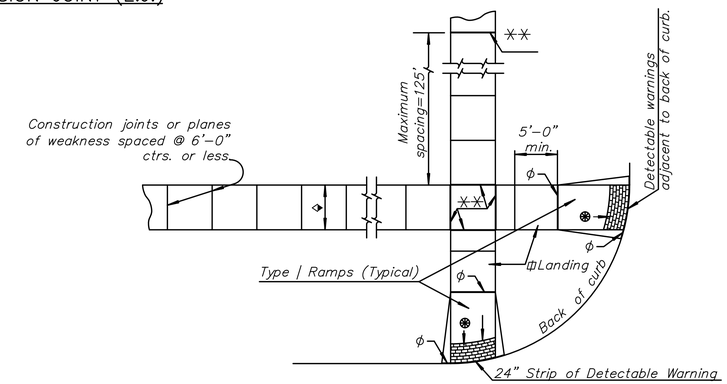

TYPICAL PLAN

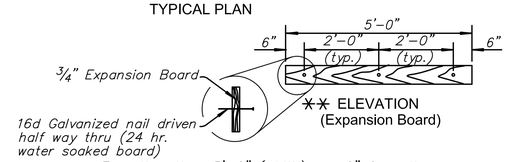

For other than 5'-0" (width) use 6" from the end and balanced (3'-0" max.) nail spacing.

ϕ Expansion Joint (3/4" board) placed at either back of curb line or at sidewalk back of curb line or at sidewalk line.

⁎⁎ Expansion joint (3/4" board) located as shown.

⬘ Variable width (5'-0" min.). Entrance walk to be same width as approach walk. Use sidewalk width of 4'-0" where existing conditions prohibit use of 5'-0".

✡ New construction ramp slopes are 12: 1 or flatter. Desirable ramp slopes for existing sites are 12:1 or flatter. Where space limitations prohibit construction of a 12:1 slope on existing sites, use the following slopes:
8:1 or flatter for a maximum rise of 3 inches
10:1 or flatter for a maximum rise of 6 inches

⧈ Use a landing slope of 48: 1 or flatter. Landings are the same width as ramp and a minimum 5'-0" in length.

Ψ Use a counter slope of 20:1 or flatter at the base of sidewalk ramps. See curb and gutter detail sheet.

⊛ Detectable warning installation is typical and required on Sidewalk Ramps Type 1, Type 2, Type 3, median ramp crossings and other locations as shown in the plans. See ramp detail sheet.

TYPICAL SIDEWALK PLAN AND DETAILS

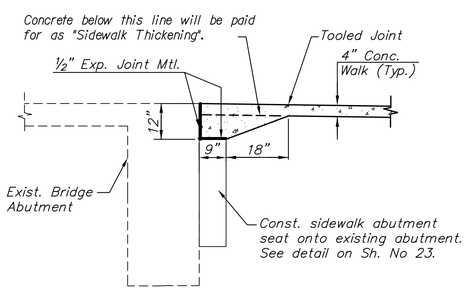

SIDEWALK AT BRIDGE ABUTMENT

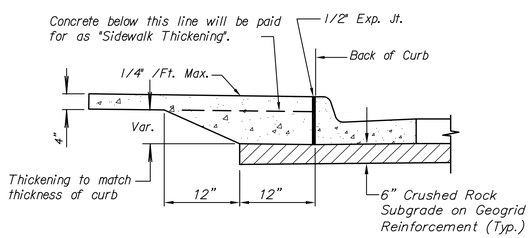

(Sidewalk at back-of-curb)

Note: All Sidewalk at Back of Curb Shall Conform to this Detail

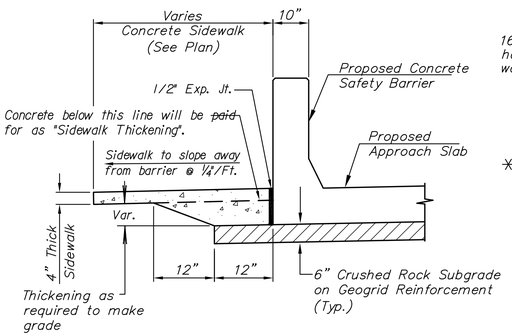

(Sidewalk at bridge approach)

SIDEWALK THICKENING DETAILS

MKEC
Wichita, KS • 316-684-9600

PAWNEE AVENUE BRIDGE OVER ARKANSAS RIVER

BRIDGE REHABILITATION IMPROVEMENTS

©2013
MKEC Engineering
All Rights Reserved
www.mkec.com
These drawings and their contents, including, but not limited to, all concepts, designs, & Ideas are the exclusive property of MKEC Engineering (MKEC), and may not be used or reproduced in any way without the express consent of MKEC.

SIDEWALK DETAILS

PROJECT NO.	472-84922
DATE	04/05/2016
SCALE	N/A

DESIGNED	DRAWN	CHECKED
JRA	JSB	JRA

NO.	REVISION	DATE
—	—	—
—	—	—
—	—	—
—	—	—
—	—	—

SHEET NO.

PLOTTED: Tuesday, April 05, 2016 @ 11:00AM
J:\Civil\110264\dwg\DETAILS\110264 Sidewalk Details.dwg