FHWA REG NO.	STATE	PROJECT NO.	YEAR	SHEET NO.	TOTAL SHEETS
7	KANSAS	87-N-0200-01	2001	22	78

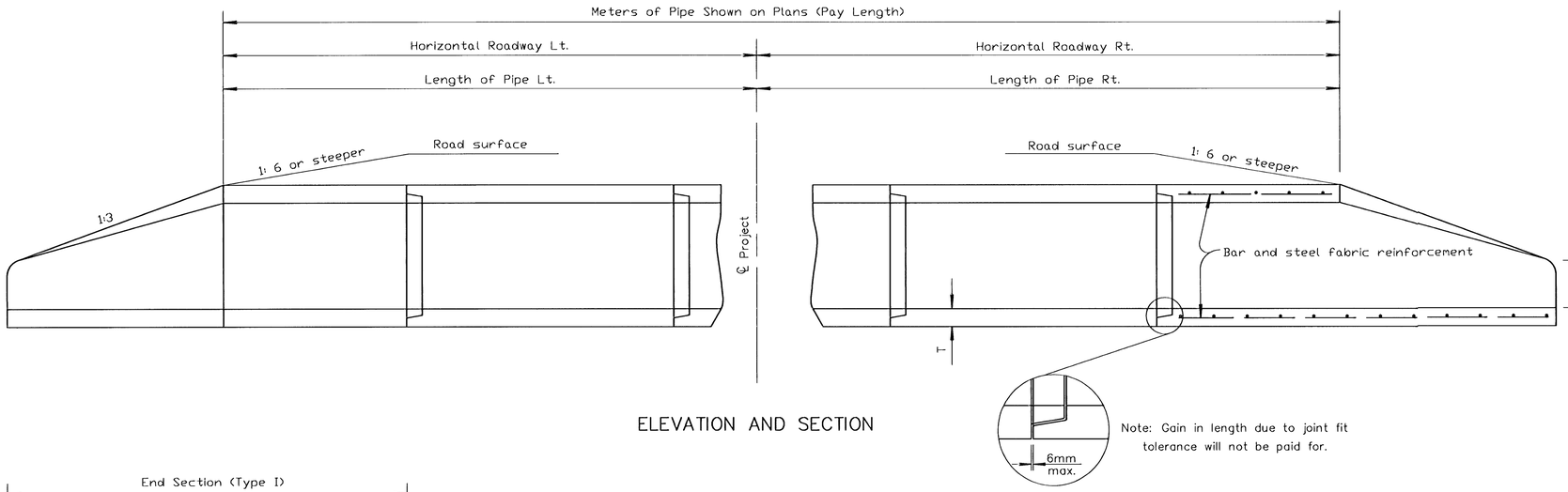

ELEVATION AND SECTION

Note: Gain in length due to joint fit tolerance will not be paid for.

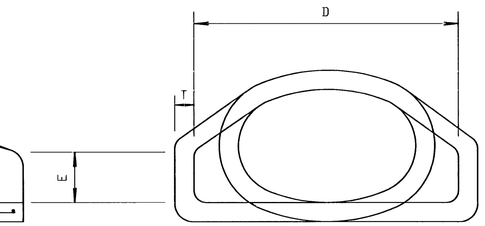

FLARED END SECTION ELEVATION

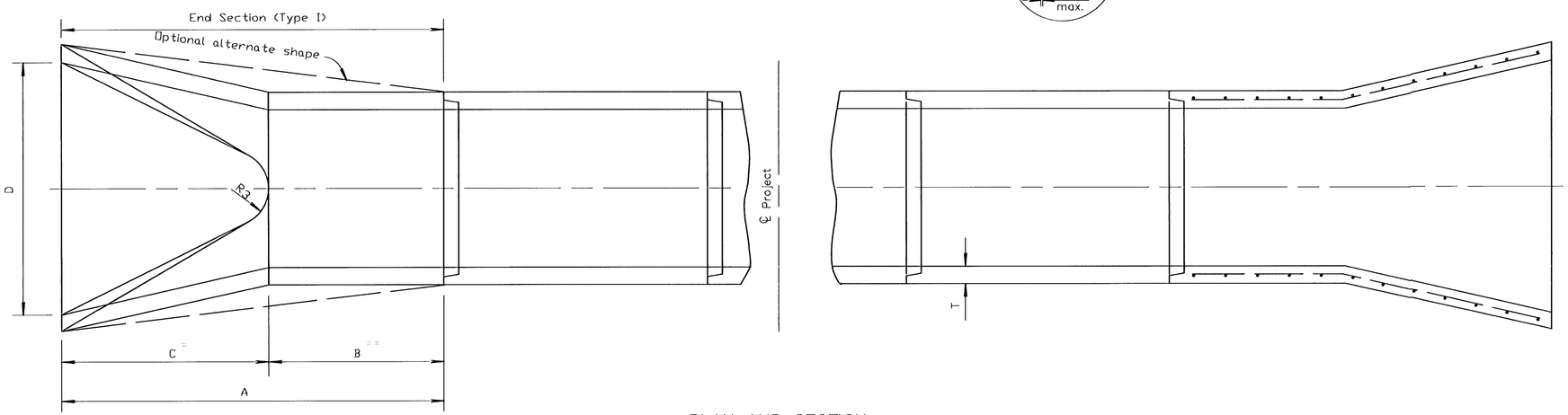

PLAN AND SECTION

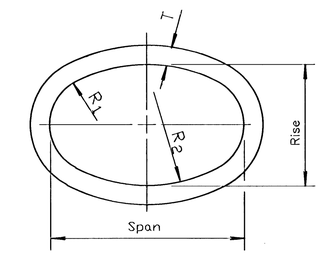

END ELEVATION

Note: The culverts listed on this sheet may or may not indicate that the culvert installed will be reinforced concrete, steel, or aluminum.

Design of end section shall conform to standard reinforced concrete horizontal elliptical pipe. Slight variations in the dimensions specified will be allowed.

G:\CIVIL\99257\DWG\SWS\Rd713si.DWG

END SECTION (TYPE I) NOMINAL DIMENSIONS

Bid Designation m^2	Min. W.W. Area m^2	Span	Rise	Overall Length A	Barrel Length B	C	D	E	R_1	R_2	R_3	T
0.10 or 0.15	0.17	575	365	1 830	1 145	685	915	200	155	505	150	69
0.20,0.25or0.30	0.31	770	490	1 830	840	990	1 220	215	210	665	175	82
0.35	0.38	865	550	1 830	660	1 170	1 370	230	235	750	200	88
0.45	0.47	960	610	1 830	460	1 370	1 525	240	260	835	230	94
0.55	0.59	1 055	670	1 830	380	1 450	1 675	265	290	920	265	94
0.65	0.69	1 150	730	2 440	915	1 525	1 830	285	315	1 000	300	113
0.80	0.82	1 250	795	2 440	915	1 525	1 905	305	345	1 085	315	119
0.90	0.95	1 345	855	2 440	915	1 525	1 980	400	370	1 165	330	125
1.00 or 1.15	1.20	1 535	975	2 440	915	1 525	2 135	535	415	1 310	355	138
1.30 or 1.55	1.54	1 730	1 095	2 440	915	1 525	2 285	650	475	1 485	405	150

* Paid for as separate item of 'End Sections'.

** Included in pay length of pipe.

PIPE CULVERT SUMMARY

Station	Location	Type	Size m^2	Crown Grade Elev.	Flow line LT.	Flow line RT.	Horizontal Roadway LT.	Horizontal Roadway RT.	Degree of Rotation	Length of Pipe LT.	Length of Pipe RT.	Meters of Pipe	End Sects. Type I LT.	End Sects. Type I RT.	End Sects. Type III LT.	End Sects. Type III RT.	End Sects. Type IV LT.	End Sects. Type IV RT.

See Sheet 24 for Storm Sewer Conduits

G:\CIVIL\99257\DWG\SWS\RD713si.DWG

NO.	DATE	REVISIONS	BY	APP'D
1	6-15-95	Revised table & labeling	R. J. S.	J. O. B.

KANSAS DEPARTMENT OF TRANSPORTATION

CONCRETE END SECTION FOR REINFORCED CONCRETE HORIZONTAL ELLIPTICAL PIPE TYPE I

RD713 SI

FHWA APPROVED	7-31-95	APP'D. James O. Brewer	
DESIGNED	DETAILED	QUANTITIES	TRACED Bowser
DESIGN CK.	DETAIL CK.	QUAN.CK.	TRACE CK. Seitz

G:\CIVIL\99257\DWG\SWS\RD713SI.DWG Mon Oct 22 07:57:42 2001