FHWA REGION NO.	STATE	PROJECT NO.	YEAR	SHEET NO.	TOTAL SHEETS
7	KANSAS	87-N-0200-01	2001	24	78

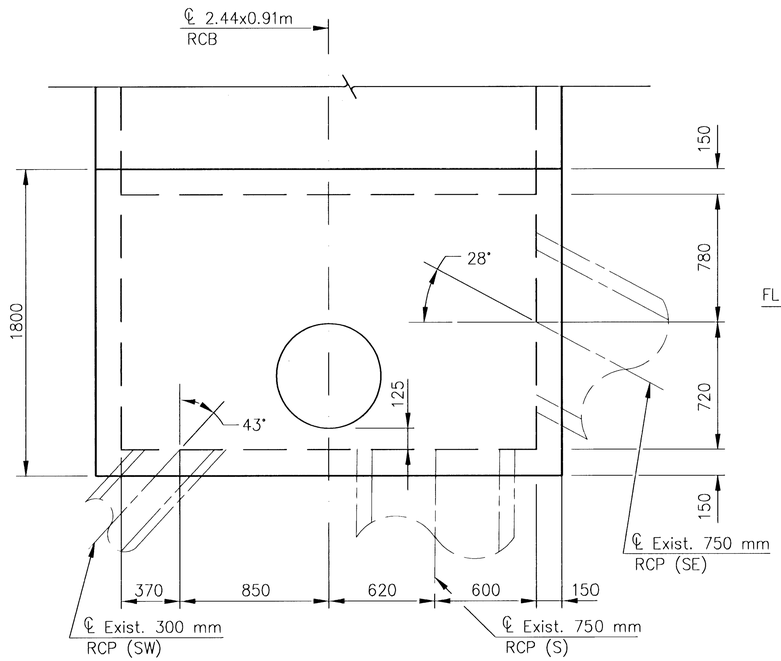

PLAN

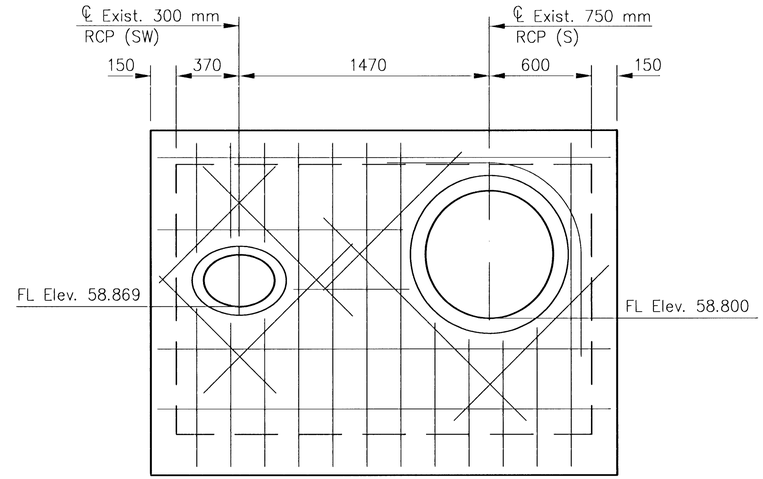

SOUTH ELEVATION

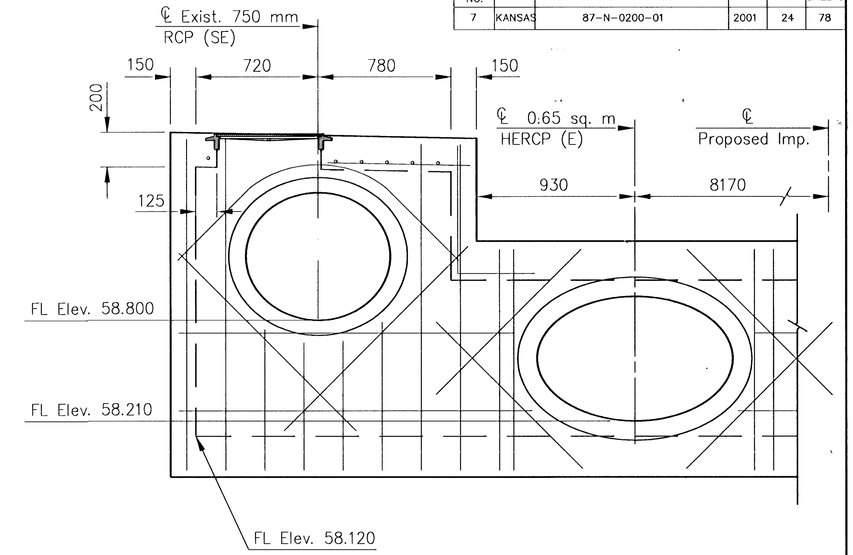

EAST ELEVATION

R.C.B WALL OPENING DETAILS FOR PIPES

Diagonal reinforcing shall be added as shown in Detail "A" or "B" depending upon the pipe location in the R.C.B. wall. The reinforcing shall be bent as required to maintain 75mm clearance to the concrete face. This reinforcing shall not be paid for directly but shall be subsidiary to "Reinforcing Steel (GR. .420)".

The R.C.B. reinforcing shall be cut or bent to provide 50mm clearance to the opening. No deduction in the reinforcing steel or concrete quantities has been made for the pipe openings.

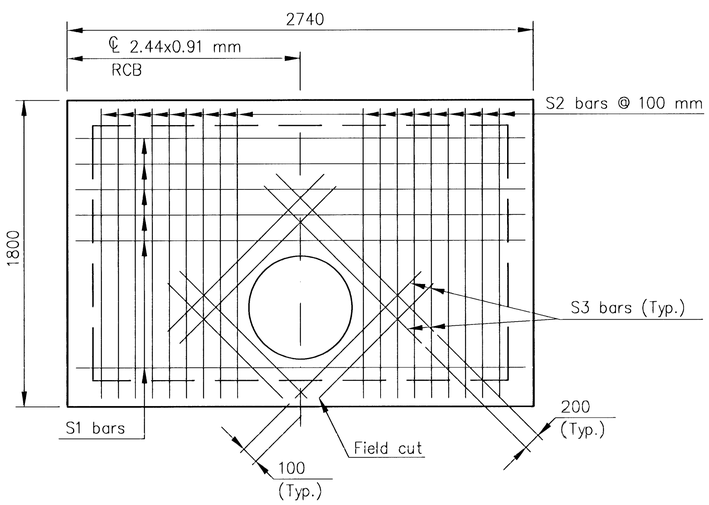

PLAN OF TOP SLAB REINFORCING

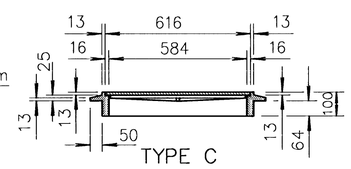

TYPE C

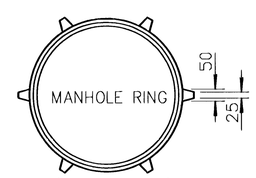

(Mass= 24 kg)

LIGHT TYPE
MANHOLE COVER & RING

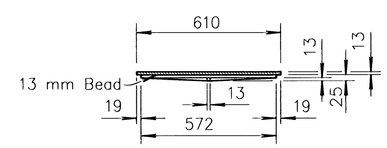

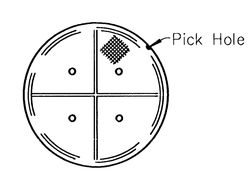

(Mass= 29 kg)

MANHOLE COVER TYPE C

MANHOLE COVER & RING DETAILS

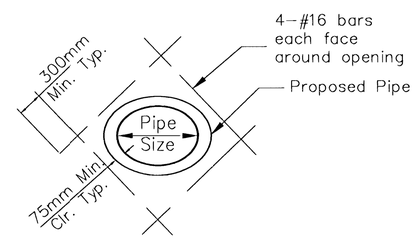

DETAIL A

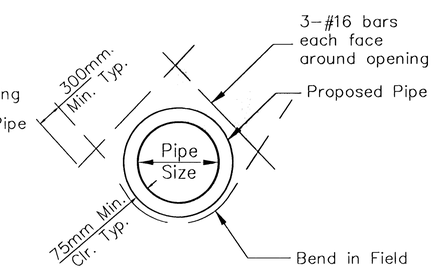

DETAIL B

NO.	DATE	REVISIONS	BY	APP'D
3				
2				
1				

KANSAS DEPARTMENT OF TRANSPORTATION

RCB DETAILS

FHWA APPROVAL		APP'D.	
DESIGNED	DETAILED	QUANTITIES	TRACED
DESIGN CK.	DETAIL CK.	QUAN.CK.	TRACE CK.

G:\CIVIL\9925\DWG\SWS\9925TD2.DWG

G:\CIVIL\9925\DWG\SWS\9925TD2.DWG Fri Oct 19 10:10:06 2001