FHWA REG NO.	STATE	PROJECT NO.	YEAR	SHEET NO	TOTAL SHEETS
7	KANSAS	87-N-0200-01	2001	54	78

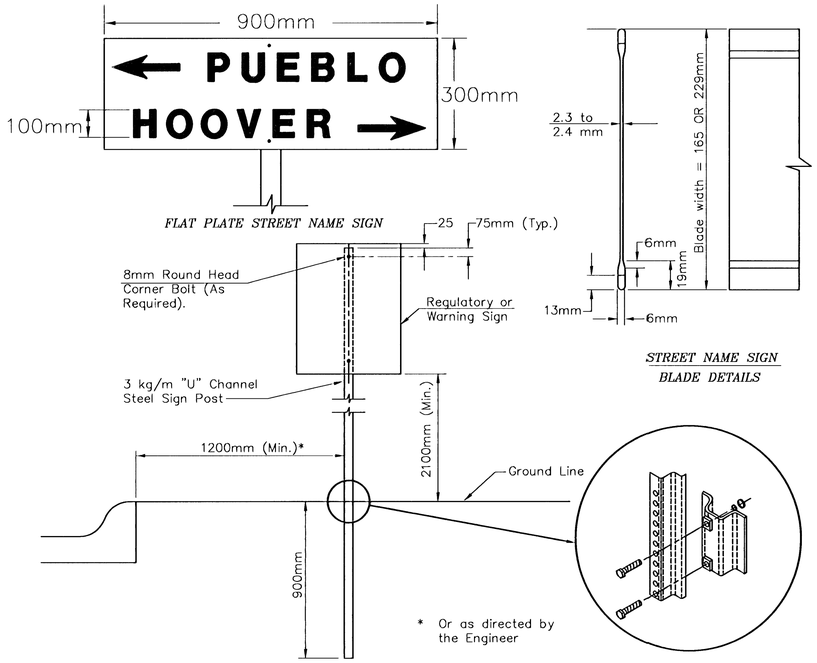

TYPICAL TRAFFIC CONTROL SIGN MOUNTING INSTALLATION

CURB AND GUTTER SECTION

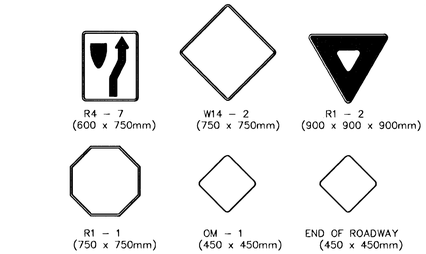

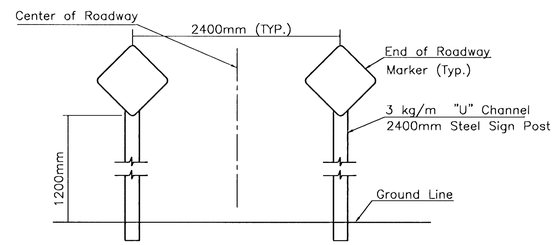

TYPICAL END OF ROADWAY SIGN MOUNTING INSTALLATION

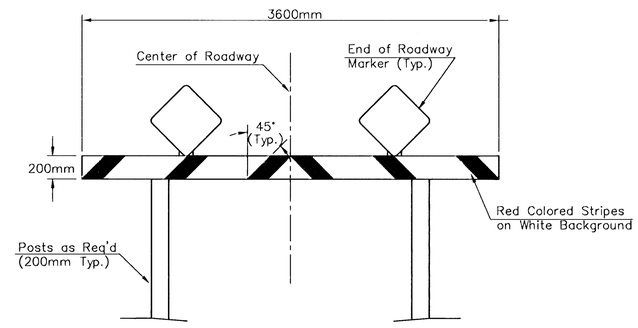

TYPE I BARRICADE DETAIL W/ E.O.R. MARKER

STREET NAME	NO. BLADES REQ'D*	
	170mm STD.	75mm METRO
21st St 3800 E		1
21st St 4000 E		1
21st St 4200 E		1
21st St 4300 E		1
Roosevelt 2200 N		1
Bluff 2200 N		1
Fountain 2200 N		1
Belmont 2200 N		1

* FOR INFORMATION ONLY - BID AS LUMP SUM

NOTE: REFERENCES BELOW TO "STANDARD SPECIFICATIONS" DENOTE "STANDARD SPECIFICATION FOR STATE ROAD AND BRIDGE CONSTRUCTION METRIC EDITION 1990" BY THE KANSAS DEPARTMENT OF TRANSPROTATION.

1. POST ANCHORS: POSTS SHALL BE ANCHORED WITH A YIELDING BASE POST SUPPORT AS DETAILED.
2. POSTS FOR TRAFFIC CONTROL SIGNS: POSTS SHALL CONFORM TO THE REQUIREMENTS OF SUBSECTION 1620 OF THE STANDARD SPECIFICATIONS EXCEPT THAT ALL POSTS SHALL WEIGH 3 kg/m MINIMUM.
3. POSTS FOR STREET NAME SIGNS (SNS): POSTS SHALL BE 2.7 m LONG, CONSTRUCTED FROM 60mm O.D. GALVANIZED STEEL PIPE WEIGHING A MINIMUM OF 3 kg/m. POSTS SHALL BE POSITIONED SO THAT THE BOTTOM BLADE IS 7 FEET ABOVE GRADE.
4. POSTS FOR END OF ROADWAY SIGN TO BE 8' LONG AND INSTALLED A MINIMUM OF 1.2m FROM ROADWAY TO BOTTOM OF SIGN.
5. SIGN BLANKS FOR TRAFFIC CONTROL SIGNS: SIGN BLANKS SHALL BE FABRICATED FROM 2mm ALUMINUM ALLOY 6063-T6 CONFORMING TO THE REQUIREMENTS OF SUBSECTION 1626 OF THE STANDARD SPECIFICATIONS.
6. SIGN BLADES FOR STREET NAME SIGNS: EXTRUDED ALUMINUM BLADES SHALL BE ALUMINUM ALLOY CONFORMING TO 6063-T6 OR 5052-H38 (ASTM SPECIFICATION B221, LATEST ISSUE). BLADES SHALL HAVE AN ALODINE OR PHOSPHATE ETCHED FINISH. BLADES SHALL HAVE SQUARE CORNERS AND NO HOLES.

   MINIMUM BLADE LENGTH SHALL BE 600mm. MAXIMUM BLADE LENGTH SHALL BE 1.2m. LENGTH VARIES BY INCREMENTS OF 150mm.

   BLADES BEARING THE STREET NAMES SHALL BE FIRMLY ATTACHED TO THE MOUNTING BRACKETS USING ALLEN-TYPE SET SCREWS. THE BLADES SHALL BE ORIENTED PARALLEL TO THE STREET.
7. MOUNTING BRACKETS FOR SIGNS: DIE-CAST ALUMINUM BRACKETS SHALL BE ALUMINUM ALLOY 360 HAVING A TENSILE STRENGTH OF 3090 kg/cm2. THE BRACKETS SHALL BE SMOOTHLY FINISHED FREE OF PITS, BURRS, AND FLAWS. EACH BRACKET SHALL BE TAPPED AND DRILLED FOR 8mm ZINC-PLATED ALLEN-TYPE SET SCREWS HAVING SELF-LOCKING SAW-TOOTH ENDS.
8. FASTENERS: ALL STEEL FASTENERS FOR TRAFFIC CONTROL SIGNS SHALL BE GALVANIZED AND SHALL CONFORM TO THE REQUIREMENTS OF SUBSECTION 1614 OF THE STANDARD SPECIFICATIONS.
9. REFLECTIVE SHEETING: REFLECTIVE SHEETING SHALL BE TYPE II - HIGH PERFORMANCE CLASS HA IN ACCORDANCE WITH SUBSECTION 2201 OF THE STANDARD SPECIFICATIONS.
10. PROCESS INK: ALL PROCESS INK SHALL CONFORM TO THE REQUIREMENTS OF SUBSECTION 2202 OF THE STANDARD SPECIFICATIONS.
11. DETAILS: REGULATORY AND WARNING SIGNS SHALL CONFORM TO THE DETAILS IN "STANDARD HIGHWAY SIGNS", FHWA, 1979.
12. DETAILS - SNS: THE REFLECTIVE SHEETING FOR THE 170mm STANDARD SIZE SNS IS TO BE THE HIGHWAY GREEN BACKGOUND WITH SILVER-WHITE #2 COPY WITH 100mm UPPER CASE AND LOWER CASE PRIMARY COPY AND SUFFIX COPY. BOTH SERIES "C". FACES TO TRIM TO A 160mm (SEE DETAIL A.)

    THE REFLECTIVE SHEETING FOR THE 225mm METRO SIZE SNS IS TO BE THE HIGHWAY GREEN BACKGROUND WITH SILVERWHITE #2 COPY WITH 130mm UPPER CASE AND LOWER CASE PRIMARY COPY AND SUFFIX COPY, BOTH SERIES "C". THE CARDINAL DIRECTION CENTERED DIRECTLY BELOW THE BLOCK NUMBER SHALL BE AN UPPER CASE, 75mm SERIES "C" LETTER. FACES TO TRIM TO A 215mm WIDTH. (SEE DETAIL B.)

    FOR CUL-DE-SAC STREETS, A 225mm METRO SIZE BLADE SHALL BE USED WITH THE HOUSE NUMBERS DISPLAYED BENEATH THE STREET NAME. LETTERING TO BE THE SAME AS FOR THE 170mm SIZE BLADE, EXCEPT THAT THE HOUSE NUMBER INFORMATION SHALL BE 100mm SERIES "C".

    SHOP DRAWINGS OF LAYOUT FOR SNS SHALL BE SUBMITTED TO THE TRAFFIC ENGINEERING DIVISION OF THE CITY OF WICHITA FOR APPROVAL PRIOR TO FABRICATION. THE FINISHED SIGNS AS SUPPLILED SHALL BE OF GOOD APPEARANCE, FREE FROM RAGGED EDGES, CRACKS SCALES OR BLISTERS AND SHALL BE CLEAN-CUT. SIGNS SHALL BE PACKED IN SUCH MANNER AS TO PREVENT DAMAGE OR DEFACEMENT DURING SHIPMENT OR STORAGE.
13. PERMANENT TRAFFIC CONTROL AND SNS: PERMANENT TRAFFIC CONTROL AND SNS SHALL BE MEASURED AND PAID FOR AT THE LUMP SUM PRICE FOR SIGNING. THE PAYMENT AS SET FORTH ABOVE SHALL BE CONSIDERED FULL COMPENSATION FOR ALL EXCAVATION, BACKFILLING. POSTS, ANCHORS, FASTENERS, MATERIALS, LABOR, TOOLS AND INCIDENTALS NECESSARY TO COMPLETE THIS WORK.

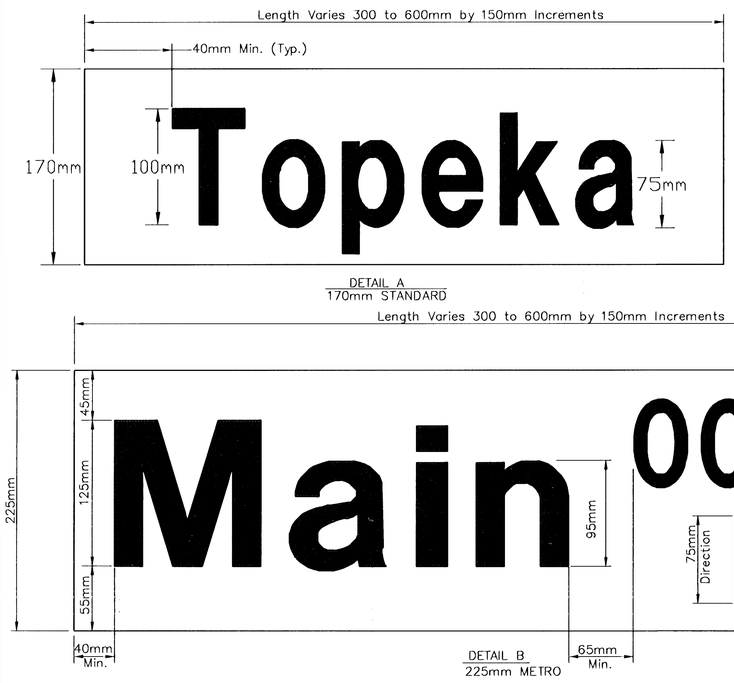

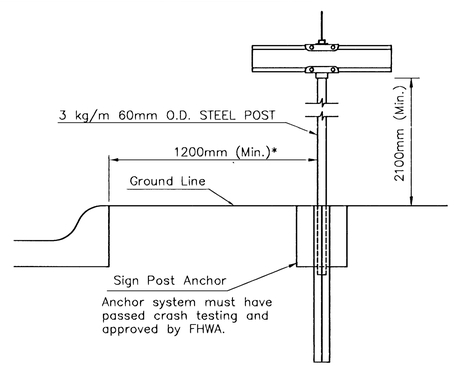

TYPICAL STREET NAME SIGN MOUNTING INSTALLATION

CURB AND GUTTER SECTION

SIGN ASSEMBLY TABLE

STATION	OFFSET	SIGN	QUANTITY*
21St. North			
0+769.58	18.0 m Lt.	R1-1	1
0+782.89	18.0 m Lt.	SNS	1
0+803.50	9.5 m Rt.	W11-2	1
0+967.89	9.5 m Lt.	R2-1	1
0+983.50	9.5 m Lt.	W11-2	1
0+993.46	16.0 m Lt.	R1-1	1
1+006.89	16.0 m Lt.	SNS	1
1+027.57	11.5 m Rt.	R2-1	1
1+179.28	13.5 m Lt.	R1-1	1
1+192.78	13.5 m Lt.	SNS	1
1+339.90	12.7 m Lt.	SNS	1
1+410.45	11.5 m Lt.	R3-7L	1
1+541.39	10.5 m Lt.	R2-1	1
		TOTAL	13

* FOR INFORMATION ONLY - BID AS LUMP SUM

G:\CIVIL\99257\DWG\DETAILS\SIGNDTL.DWG

SIGNING DETAILS

SCALE: NONE	APPROVED BY	DATE: JUNE 2001
DRAWN BY: GJR		REVISED:

CITY OF WICHITA

DEPARTMENT OF PUBLIC WORKS

TRAFFIC ENGINEERING SECTION

G:\CIVIL\99257\DWG\DETAILS\SIGNDTL.DWG Fri Oct 19 08:36:49 2001