FHWA REG. NO.	STATE	PROJECT NO.	YEAR	SHEET NUMBER	TOTAL SHEETS
7	KANSAS	87 N-0194-01	2001	25	43

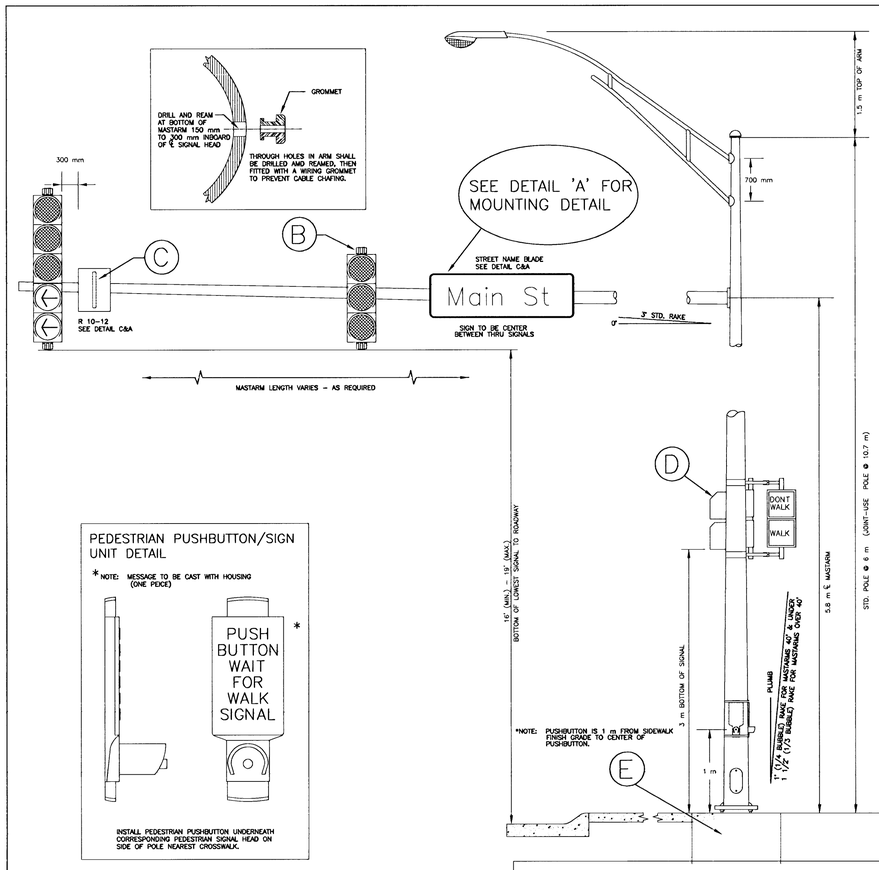

PEDESTRIAN PUSHBUTTON/SIGN UNIT DETAIL

*NOTE: MESSAGE TO BE CAST WITH HOUSING (ONE PIECE)

INSTALL PEDESTRIAN PUSHBUTTON UNDERNEATH CORRESPONDING PEDESTRIAN SIGNAL HEAD ON SIDE OF POLE NEAREST CROSSWALK.

BANDED SIGN MOUNTING BRACKET DETAIL

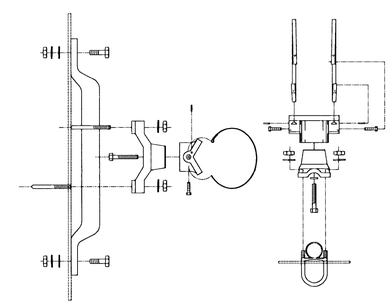

A

TYPE I SIGNAL MOUNTING BRACKET ASSEMBLY DETAIL

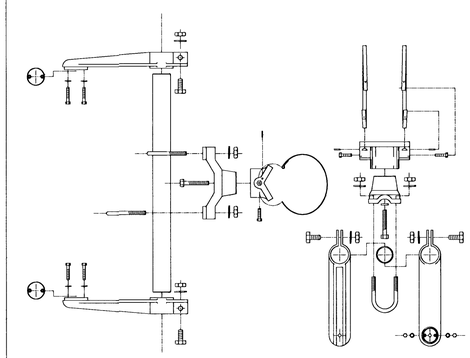

B

STANDARD SIGNING

R 10-12
600mm x 750mm

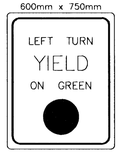

SEE DETAIL "A" FOR MOUNTING HARDWARE

1.5 m x 450 mm

SEE DETAIL "A" FOR MOUNTING HARDWARE USE 2 PER SIGN

C

TYPE II SIGNAL MOUNTING BRACKET ASSEMBLY (SIDE-OF-POLE)

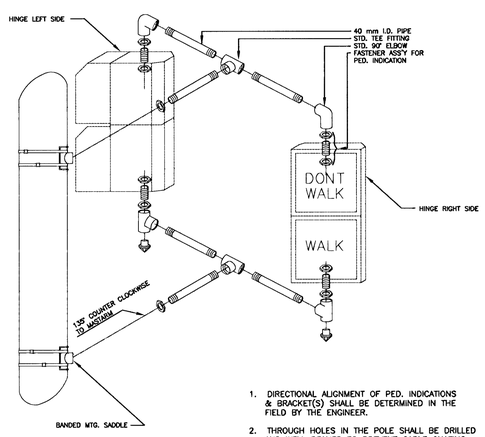

1. DIRECTIONAL ALIGNMENT OF PED. INDICATIONS & BRACKET(S) SHALL BE DETERMINED IN THE FIELD BY THE ENGINEER.
2. THROUGH HOLES IN THE POLE SHALL BE DRILLED AND WELL REAMED TO PREVENT CABLE CHAFING.
3. HINGE PEDESTRIAN SIGNAL DOORS AWAY FROM DOT.

REBAR CAGE

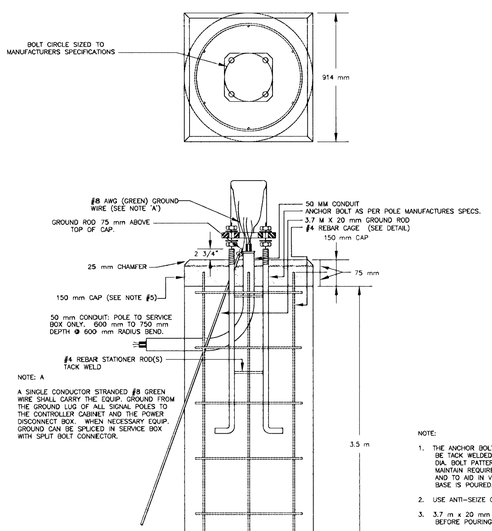

NOTE: A

A SINGLE CONDUCTOR STRANDED #8 GREEN WIRE SHALL CARRY THE EQUIP. GROUND FROM THE GROUND LUG OF ALL SIGNAL POLES TO THE CONTROLLER CABINET AND THE POWER DISCONNECT BOX. WHEN NECESSARY EQUIP. GROUND CAN BE SPLICED IN SERVICE BOX WITH SPLIT BOLT CONNECTOR.

NOTE:

1. THE ANCHOR BOLTS FOR THE SIGNAL POLE SHALL BE TACK WELDED TOGETHER IN A 400 mm OR 500 mm DIA. BOLT PATTERN (ON CENTERS AS SHOWN) TO MAINTAIN REQUIRED BOLT CONFIGURATION PATTERN AND TO AID IN VERTICAL POSITIONING WHILE CONCRETE BASE IS POURED.
2. USE ANTI-SEIZE COMPOUND ON ALL THREADS.
3. 3.7 m x 20 mm GROUND ROD TO BE POSITIONED BEFORE POURING BASE.
4. CLASS 'A' CONCRETE SHALL BE USED TO CONSTRUCT BASE.
5. CONSTRUCT A 150 mm THICK x 914 mm SQUARE CONCRETE CAP AFTER POLE HAS BEEN ERECTED & PLUMBED. CHAMFER EDGE 25 mm. HEIGHT OF CONCRETE CAP, BEFORE PAVING

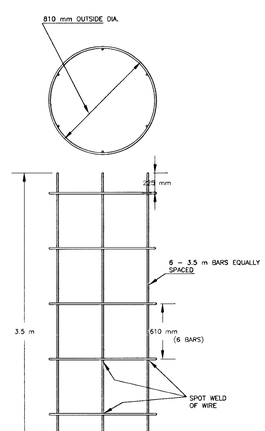

TYPE III SIDE-OF-POLE MOUNTING BRACKET ASSEMBLY

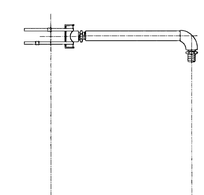

PROJECT DESCRIPTION

STEEL SIGNAL POLE ASSEMBLY DETAILS

PROJECT NUMBER

87 N-0194-01

DRAWN BY: T.M.	SCALE	REVISED BY: T.M.
DATE: FEB. 98	NO SCALE	DATE: MAY. 97