STATE	PROJECT NO.	YEAR	SHEET NO.	TOTAL SHEETS
KANSAS	87 N-0230-01	2003	40	73

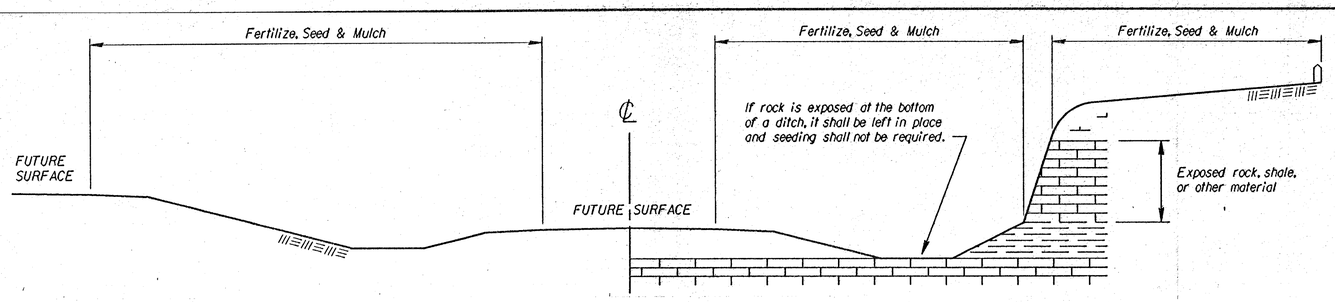

RAMP CUT SECTION

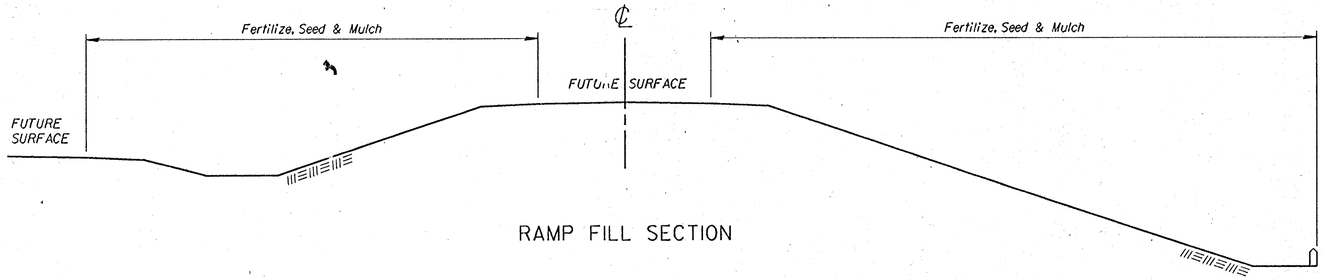

RAMP FILL SECTION

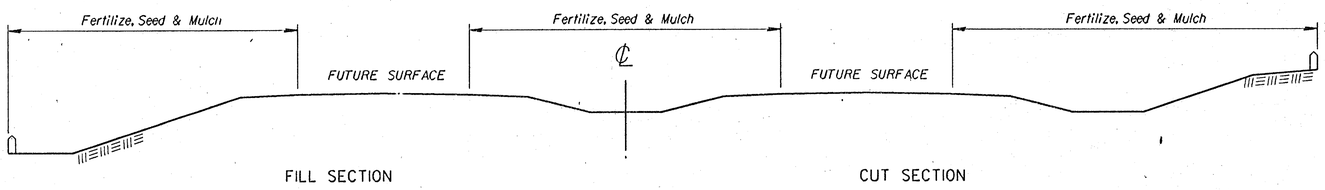

TYPICAL SECTION -- DUAL PAVEMENT

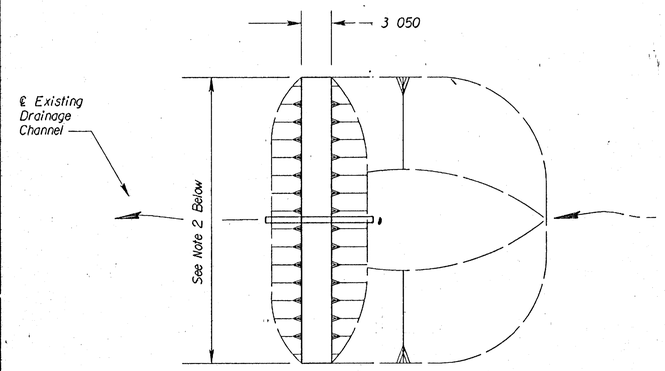

PLAN

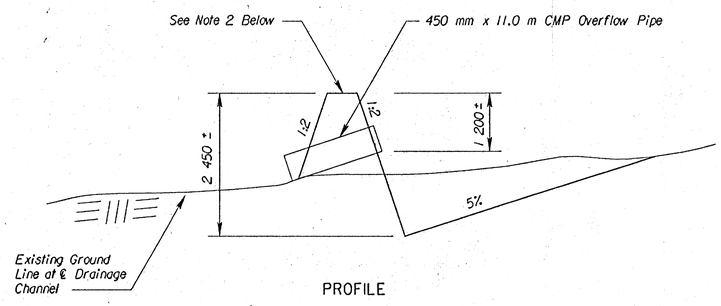

PROFILE

TEMPORARY SEDIMENT BASIN

NOTES:

1) Temporary Sediment Basins shall be constructed at locations as directed by the Engineer. All work and materials necessary for the construction of Temporary Sediment Basins shall be paid for as the bid item "Temporary Sediment Basin". The 450 mm x 11.0 m overflow pipe will be SUBSIDIARY to the bid item "Temporary Sediment Basin". The Temporary Sediment Basins shall be removed by KDOT District forces after seeding has been established if desired by the respective land owners.

2) Lengths and top elevations shall be determined in the field by the Engineer.

3) All dimensions are approximate.

GENERAL: The entire disturbed area, excepting the paved or surfaced areas, steep rocky slopes and areas of undisturbed native sod or other desirable vegetation shall be fertilized (limed when required), seeded, and mulched. Soil preparation shall conform to the Standard Specifications.

Temporary seeding shall be done during any time of the year that the soil can be cultivated. After the temporary seeding has been completed on the entire project, a permanent seeding shall be done by another project during the normal seeding season.

The Contractor will be required to finish areas of excavation, borrow and embankment in accordance with the specifications. Areas that require installation or construction of temporary water pollution control items will be finished in reasonable close conformity to the alignment, grade and cross section shown on the plans or as established by the Engineer.

MULCHING: Mulch shall be spread uniformly over all disturbed areas and punched in the soil, unless otherwise noted on the plans. If mulch tacking slurry is used, punching is not necessary. The rate of application per hectare, thickness in place, for the various mulching materials is as follows:

3,900 - 5,000 Kilograms per Hectare = 40mm loose depth spread uniformly over hectare.

All mulch shall be noxious weed free native prairie hay.

Other vegetative mulches (acceptable only with the Engineer's concurrance).

The above rate is a guide. It will be at the discretion of the Engineer to determine what rate is sufficient for adequate protection of newly seeded areas.

The amount of mulch and mulch tacking slurry in the bid quantities is estimated. The total mulch and mulch tacking slurry required shall be determined in the field. The bid item for mulching and mulch tacking slurry shall be paid for by one of the following ways: A) Plan quantity as shown on Summary of Quantities, Seeding, Sheet or Water Pollution Control Sheet, B) Slope measurement as measured in field, or C) Drill measurement less 5% as measured at the time of seeding.

SUMMARY OF SEEDING QUANTITIES: PROJECTS OF 0.4 HA. OR MORE

P.L.S. RATE/ HECTARE	HECTARES	BID ITEM	QUANTITY	UNIT
100	1.00	Fertilizer (15-30-15)	100	kg
30	1.00	Canada Wildrye Grass Seed	30	kg
15	1.00	Ryegrass Seed	15	kg
		Agricultural Limestone		Mg
		Temporary Berm		m
		Temporary Ditch Check (Rock)		cu m
		Temporary Ditch Check	53	m
		Temporary Inlet Sediment Barrier		Each
		Temporary Sediment Basin		cu m
		Temporary Slope Barrier (Set)	1	m
		Temporary Slope Drain		m
		Temporary Stream Crossing		Each
		Sediment Removal (Set)	1	cu m
		Mulch Tacking Slurry		ha
		Mulching (Temporary)	1.00	ha

(for information only) bid Lump Sum

SUMMARY OF SEEDING QUANTITIES: PROJECTS LESS THAN 0.4 HA.

P.L.S. RATE/ HECTARE	HECTARES	BID ITEM	QUANTITY	UNIT
		Fertilizer (• - •• - •••)		kg
		Canada Wildrye Grass Seed		kg
		Ryegrass Seed		kg
		Agricultural Limestone		Mg
		Seeding (TE&PC)		ls
		Temporary Ditch Check (Rock)		cu m
		Temporary Ditch Check		m
		Temporary Slope Barrier (Set)		m
		Sediment Removal (Set)		cu m
		Mulch Tacking Slurry		ha
		Mulching (Temporary)		ha

NOTE: Projects of less than 0.4 hectares shall be bid as "Seeding" by the lump sum. All disturbed areas shall be seeded, fertilized, and mulched at the listed rate per hectare. The hectares are estimated.

• - N = Nitrogen Rate of Application

•• - P_2O_5 = Phosphorous Rate of Application

••• - K_2O = Potassium Rate of Application

FERTILIZER: A ratio and application rate that equals or exceeds the required minimum rate per hectare of N, P_2O_5, K_2O listed in Summary of Quantities will be acceptable.

NO.	DATE	REVISIONS	BY	APP'D
5				
4				
3	3/01/04	Revised Standard	FCM	SHS
2	7/18/03	Revised Standard	FCM	SPV
1	5/10/99	Revised Standard	WCL	RDR

KANSAS DEPARTMENT OF TRANSPORTATION

TEMPORARY EROSION AND POLLUTION CONTROL

~~LA852A-St~~

F.H.W.A. APPROVAL			3/11/2004	APP'D		Scott H. Shields	
DESIGNED	FCM	DETAILED	FCM	QUANTITIES		TRACED	FCM
DESIGN CK.	SHS	DETAIL CK.	SHS	QUAN.CK.		TRACE CK.	SHS

Drawn By : untitled
DGN File : $$$$$$$$$$$$$$DGNSPECS$$$$$$$$$$$$
Plotted : 7/14/2004 View= PLOT 1