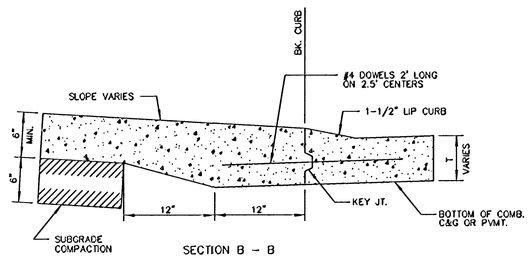


SECTION B – B

## BACK OF CURB DETAIL

6"x12" W4xW4 WIRE FABRIC REINFORCING SHALL BE PLACED SUCH THAT THE WIRES WITH THE 6" SPACING WILL RUN PARALLEL WITH THE LONGITUDINAL JOINT.

SEE JOINT DETAILS THIS SHEET

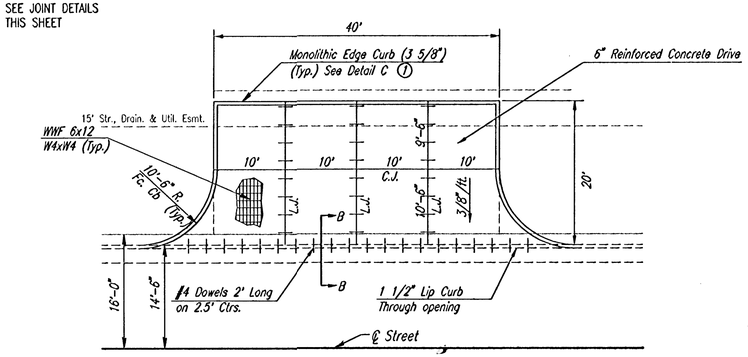


## DRIVEWAY DETAILS

⑦ MONOLITHIC EDGE CURB SHALL BE SUBSIDIARY TO "6" REINFORCED CONCRETE DRIVE"

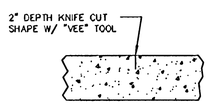


CONTRACTION JOINT (C.J.)
OR LONGITUDINAL JOINT (L.J.)

NO SAWN JOINTS WILL BE ALLOWED

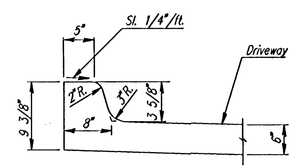


DETAIL C
(3 5/8" Monolithic Edge Curb)

RECORD DRAWING
20 NOV 03

| No. | Revision | By | Date |
|---|---|---|---|
| | | | |

CITY OF WICHITA, KANSAS
NEIL D. CABLE P.E. – CITY ENGINEER

MISCELLANEOUS PAVING DETAILS

CITY OF WICHITA PROJECT NO. 472-83678

Professional Engineering Consultants, P.A.
303 S. TOPEKA • WICHITA, KANSAS 67202
316-262-2691 • FAX 316-262-3003

| | | | | |
|---|---|---|---|---|
| Designed by | BER, JJD | Job No. | 35-02662 | Sht. 7 of 17 |
| Drawn by | TLS | Date | January 2003 | |

DSN: BER OPER: TLS SCALE: 1=10.00
Q:\2002\02662\000\MISC\TL1 03-04-2003 11:28:28 am