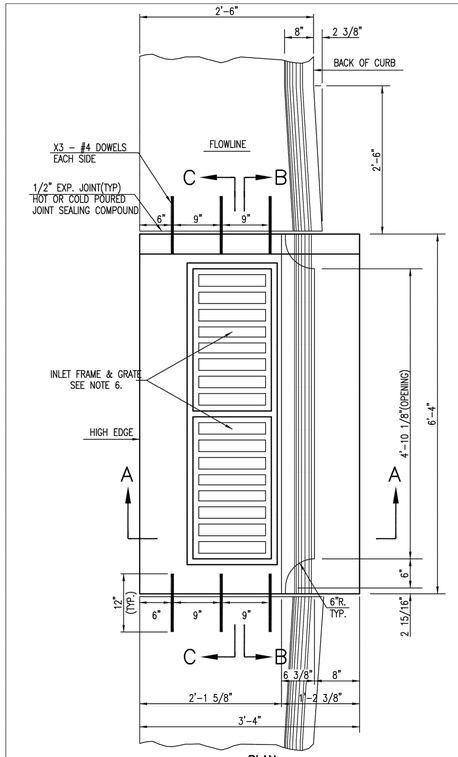

PLAN

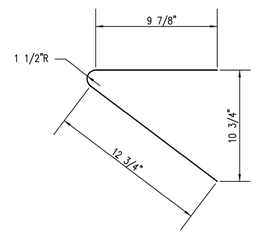

"A" BAR

BENDING DIAGRAM

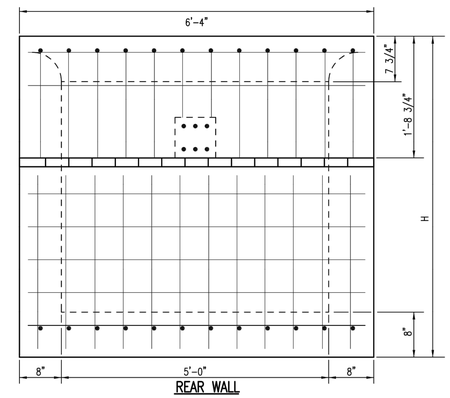

REAR WALL

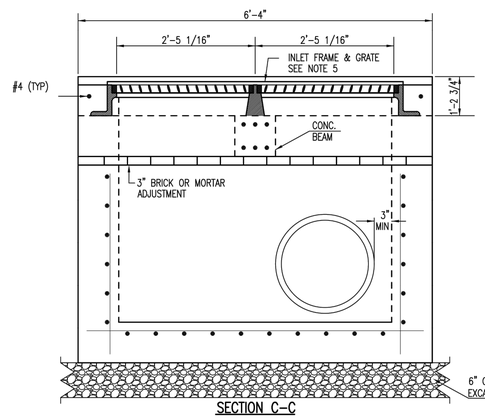

SECTION C-C

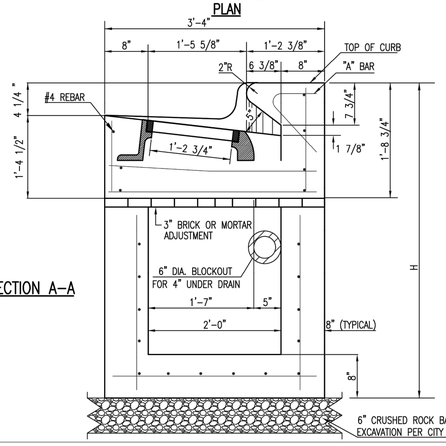

SECTION A-A

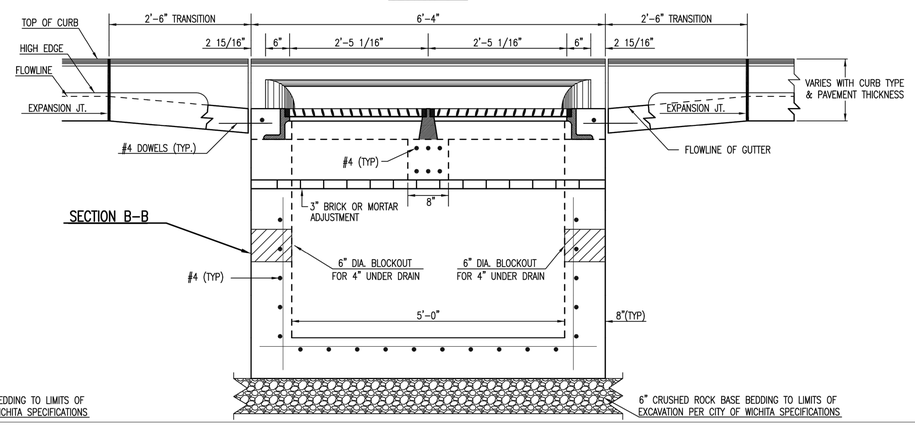

GENERAL NOTES

1. USE THE CONCRETE MIX SPECIFIED FOR THE CITY OF WICHITA CONCRETE PAVEMENT THROUGHOUT. ALL EXPOSED EDGES SHALL BE FINISHED WITH AN EDGING TOOL. REINFORCING BARS SHALL BE BENT AROUND PIPE.
2. INLET INVERT SHALL BE SHAPED WITH 8 SACK MIX CONCRETE TO CREATE FLOW CHANNELS AND TO INCREASE HYDRAULIC EFFICIENCY SUCH THAT THE INLET WILL BE SELF CLEANING BETWEEN ALL INLET AND/OR OUTLET PIPES.
3. ALL BARS ARE #4 WITH 6" SPACING AND SHALL HAVE A MINIMUM CLEARANCE OF 1 1/2 INCHES UNLESS OTHERWISE NOTED ON THE PLANS.
4. NO DEDUCTIONS WILL BE MADE IN PAY LENGTH OF CURB, GUTTER, OR CURB AND GUTTER THROUGH THE INLET AREA.
5. USE DEETER FOUNDRY, INC. CASTING NO. 2442/43 OR EJIW 7600Z LEFT SIDE, 7600 RIGHT SIDE IN INLET FRAME AND GRATE WITH STYLE H GRATE. INLET FRAME TO BE PROOF LOAD TESTED TO 40,000 LBS. ON UNSUPPORTED SIDE.
6. REINFORCING BARS SHALL BE CUT OR BENT AROUND PIPES. NO DEDUCTION IN CONCRETE QUANTITIES SHALL BE MADE FOR PIPE OPENINGS.
7. THE VANES OF THE GRATE SHALL BE ORIENTED WITH RESPECT TO THE FLOW ARROWS SHOWN ON THE PLANS.
8. CONTRACTOR SHALL REMOVE LIFTING HOOKS AFTER INSTALLATION. RECESSES IN INLET WALL SHALL BE GROUTED FLUSH TO THE INLET WALL WITH HYDRAULIC CEMENT AFTER THE INLET IS IN PLACE. LIFTING HOLES THRU THE INLET WALL WILL NOT BE ACCEPTED.

REVISED: MARCH 2015

CITY OF WICHITA
PUBLIC WORKS & UTILITIES
ENGINEERING DIVISION

STANDARD DOUBLE
TYPE II CURB INLET

CITY ENGINEER
GARY JANZEN, P.E.

PROJECT NUMBER	OCA NUMBER	DATE
___-_____	_____	

CITY ENGINEER'S OFFICE
CITY HALL - SEVENTH FLOOR
455 NORTH MAIN STREET
WICHITA, KANSAS 67202-1620
(316) 268-4501

SHEET
_ of _

SW-106

Saved: 05-13-2015 4:34:59 PM by JTS
Plot Scale:1:1 08-02-2016 3:27:09 PM by MATTHEW MCCORMICK
O:\STANDARD\Standards Website\Storm Water\SW-106 - Type 2 Inlet Double

PEC PROFESSIONAL ENGINEERING CONSULTANTS, P.A.
303 SOUTH TOPEKA WICHITA, KS 67202
316-262-2691 www.pec1.com

PRINTS ISSUED

DATE	PURPOSE	NO.
12.02.16	FOR BID	

DOUGLAS AVE.
STREETSCAPE
IMPROVEMENTS
WICHITA, KS

LK Architecture
Architecture • Engineering • Planning • Interior Design • Landscape Architecture

LK Architecture Inc. ©
345 RIVERVIEW, WICHITA, KS 67203
Phone (316) 268-0230 Fax: (316) 268-0205

CONTACT: Jeffery A. Best, ASLA

PROJECT NUMBER:
15749.01

SHEET TITLE:
SW-106 STANDARD

SHEET NUMBER:
C26