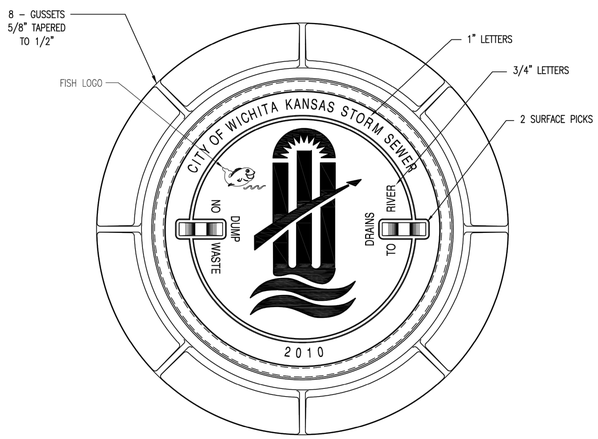

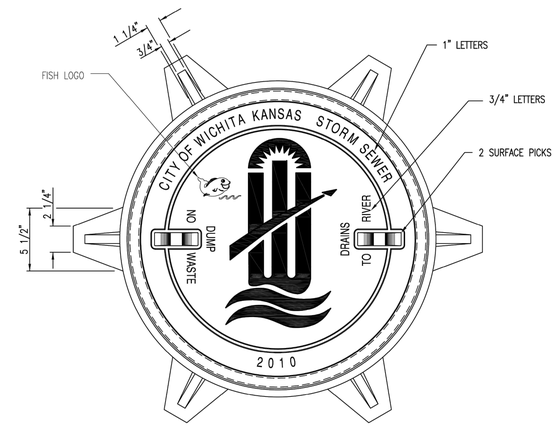

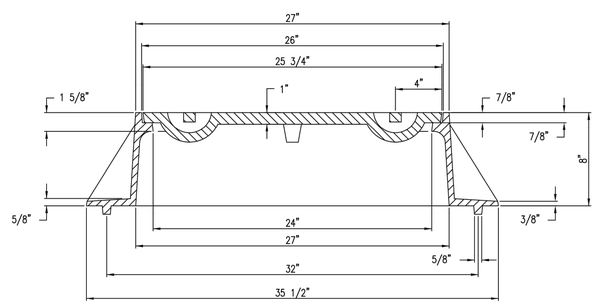

MANHOLE FRAME

DEETER #1261 OR EJIW #1936-Z1

NOTE:
1. FURNISHED WITH MACHINED HORIZONTAL BEARING SURFACE.
2. COVER TO BE DEETER #1261 OR EJIW #1936A.

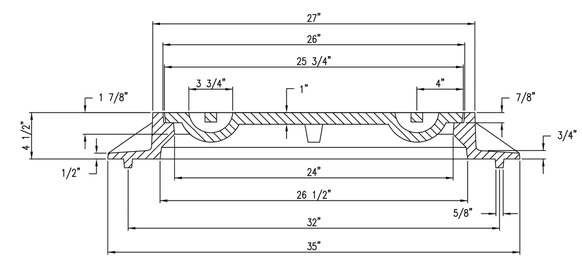

INLET FRAME

DEETER #2014 OR EJIW #1936-Z4

NOTE:
1. FURNISHED WITH MACHINED HORIZONTAL BEARING SURFACES.
2. NOT TO BE USED UNDER PAVEMENT.
3. COVER TO BE DEETER #1261 OR EJIW #1936A.

CITY OF WICHITA

PUBLIC WORKS & UTILITIES
ENGINEERING DIVISION

MANHOLE/INLET FRAME AND COVER (STORM SEWER)

CITY ENGINEER
GARY JANZEN, P.E.

PROJECT NUMBER	OCA NUMBER	DATE
___-_____	_____	11/2010

CITY ENGINEER'S OFFICE
CITY HALL - SEVENTH FLOOR
455 NORTH MAIN STREET
WICHITA, KANSAS 67202-1620
(316) 268-4501

SHEET
_ of _

SW-303

Saved: 01-14-2015 5:16:05 PM by JEFJ
Plot Scale: 1:5 09-02-2010 3:45:06 PM by MATTHEW MCCORMICK
Q:\STANDARD\Standards Wichita\Storm Water\SW-303-MH-Inlet Frame & Cover

PRINTS ISSUED

DATE	PURPOSE	NO.
12.02.16	FOR BID	

DOUGLAS AVE.
STREETSCAPE
IMPROVEMENTS
WICHITA, KS

LK Architecture

Architecture • Engineering • Planning • Interior Design • Landscape Architecture

LK Architecture Inc. ©
345 RIVERVIEW, WICHITA, KS 67203
Phone (316) 268-0230 Fax: (316) 268-0205
CONTACT: Jeffery A. Best, ASLA

PROJECT NUMBER:
15749.01

SHEET TITLE:
SW-303 STANDARD

SHEET NUMBER:
C31

PEC PROFESSIONAL ENGINEERING CONSULTANTS, P.A.
303 SOUTH TOPEKA WICHITA, KS 67202
316-262-2691 www.pec1.com