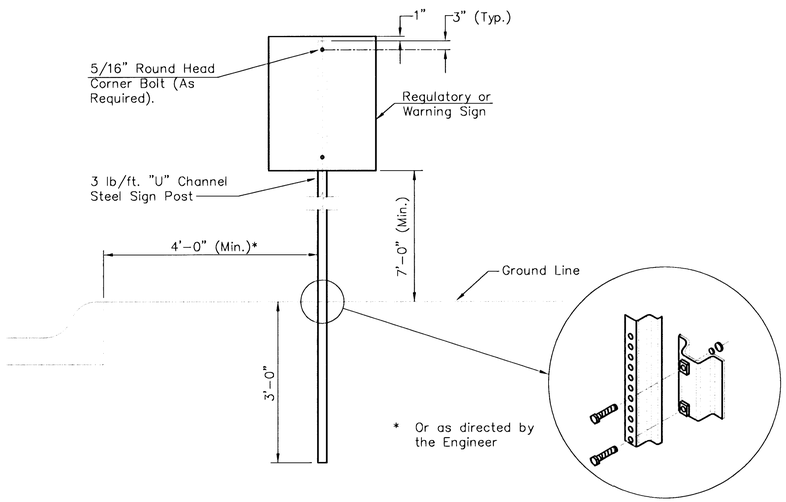

TYPICAL TRAFFIC CONTROL SIGN MOUNTING INSTALLATION

CURB AND GUTTER SECTION

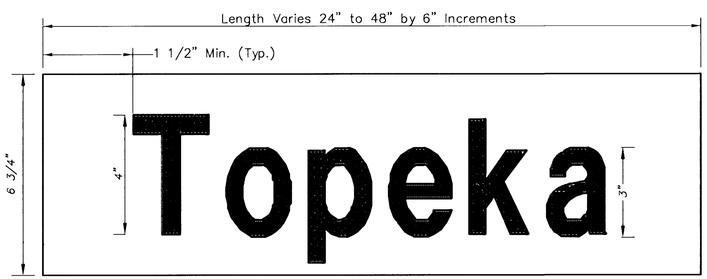

DETAIL A
6 3/4" STANDARD

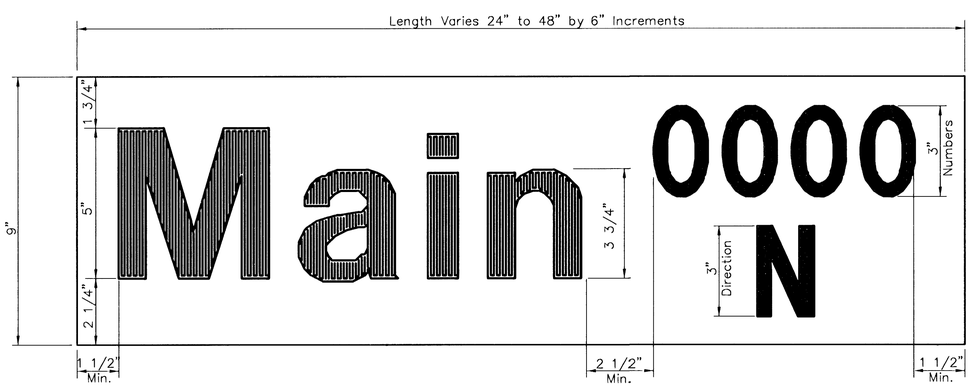

DETAIL B
9" METRO

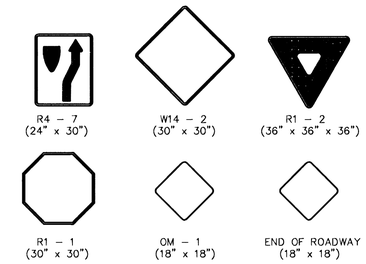

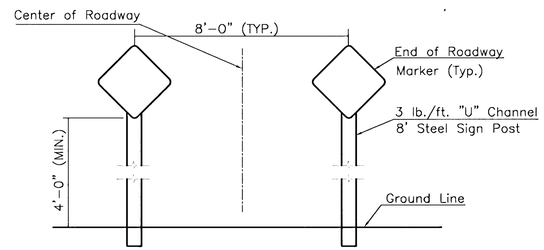

TYPICAL END OF ROADWAY SIGN MOUNTING INSTALLATION

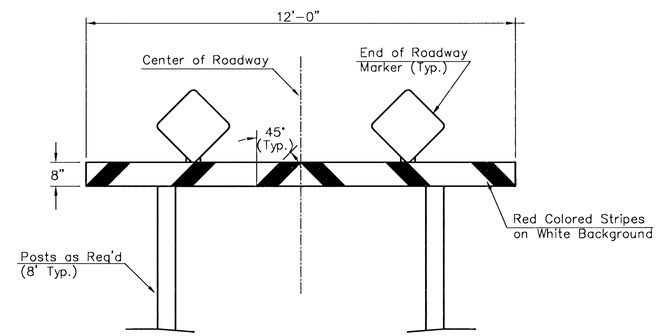

TYPE I BARRICADE DETAIL W/ E.O.R. MARKER

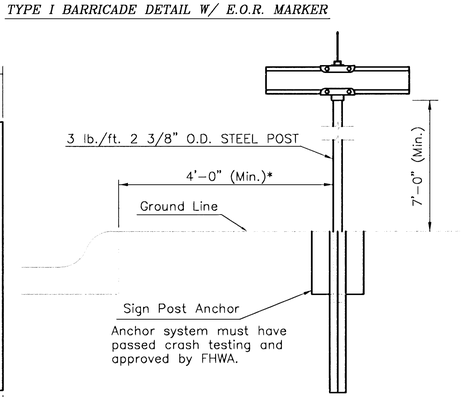

TYPICAL STREET NAME SIGN MOUNTING INSTALLATION

CURB AND GUTTER SECTION

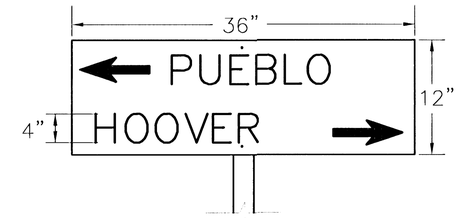

FLAT PLATE STREET NAME SIGN

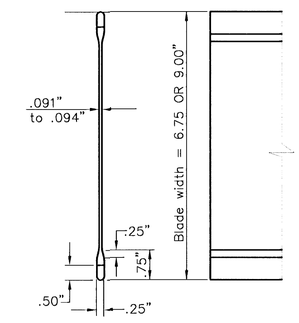

STREET NAME SIGN

BLADE DETAILS

SIGN ASSEMBLY TABLE

STATION	OFFSET	SIGN	QUANTITY*
0+50, Lotus	22.0' Lt	R1-1	1