KELLOGG DR.

ADJUST EXIST SANITARY MH FROM 1327.5 TO 1329.2

ADJUST EXIST SANITARY MH FROM 1330.62 TO 1331.30

ADJUST EXIST SANITARY MH FROM 1333.17 TO 1333.67

Springdale East 2nd Addition

LAKEVIEW DR.
Prop A.C. Pavement

CACTUS
Prop A.C. Pavement

ADJUST EXIST SANITARY MH FROM 1329.78 TO 1328.6

ADJUST EXIST SANITARY MH FROM 1320.1 TO 1321.4

2.0' WIDE BERM SEE DETAIL THIS SHEET

10' Drainage Easement by Seperate Instrument

20' Utility Easement

ADJUST EXIST SANITARY MH FROM 1335.25 TO 1332.55

ADJUST EXIST SANITARY MH FROM 1332.44 TO 1330.85

ADJUST EXIST SANITARY MH FROM 1329.35 TO 1329.10

STAGECOACH
Exist A.C. Pavement

CACTUS CT.
Prop A.C. Pavement

SCALE 1" = 50'
IRON = ●

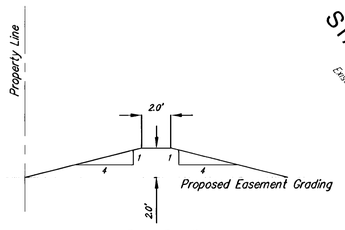

Berm Detail

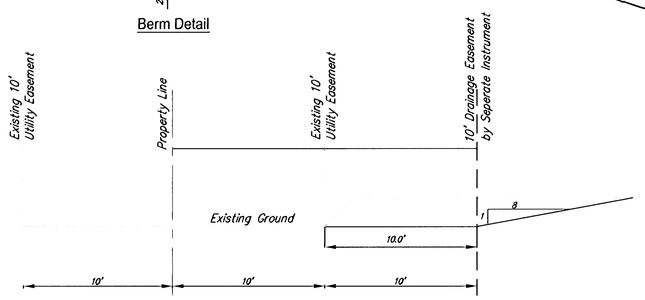

Easement Detail A-A

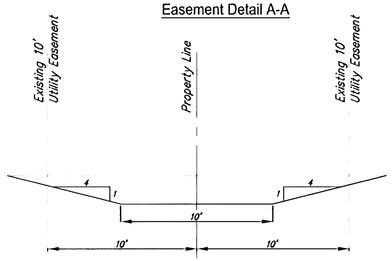

Easement Detail B-B

DETAILS NOT TO SCALE

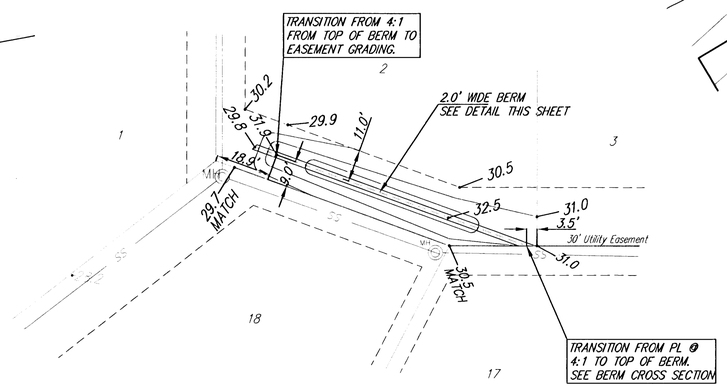

Berm Detail View

NOT TO SCALE

Springdale East 2nd
Easement Grading
WICHITA, KANSAS

Ruggles & Bohm, P.A.
Engineering, Surveying, Land Planning
924 North Main
Wichita, Kansas 67203
www.rbkansas.com
(316) 264-8008
(316) 264-4621 fax
E-mail: info@rbkansas.com

DESIGN	CMB
DRAWN	EJG
REVIEW	
UTILITY	
DATE	Nov. 27, 2002
RB JOB	2002E
SHEET	25 OF 27
DRAWING FILE	Easement Grading
PROJECT NUMBER	472-83482