SERVICE BOX CONSTRUCTION/INSTALLATION DETAILS

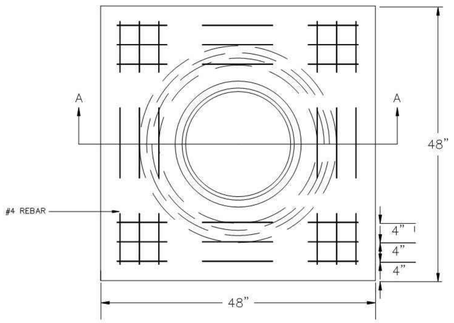

PRE-CAST CONCRETE SERVICE BOX

(36" I.D. X 54" RCP) with 6" CAP

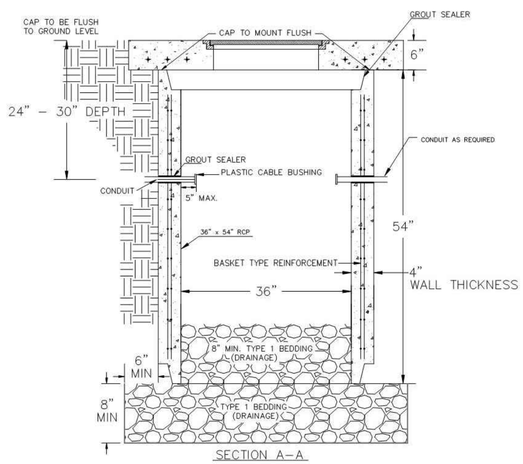

SECTION A–A

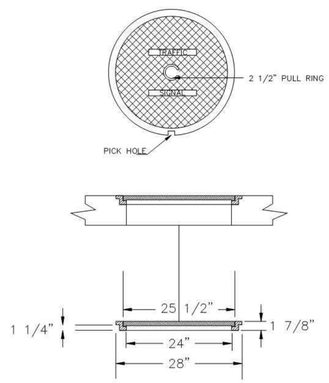

RING & COVER DETAIL

CONDUIT/DETECTOR WIRE INSTALLATION DETAILS

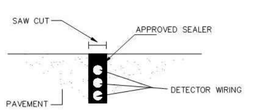

STD. CURB & GUTTER

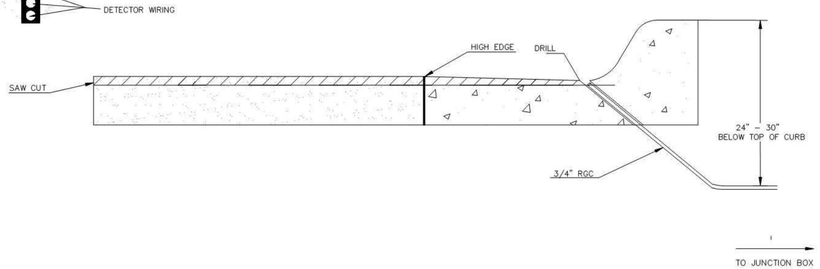

2070 CONTROLLER PAD DETAILS

REBAR SHALL BE ASTM A615M GRADE 300 MEETING THE REQUIREMENTS OF SUBSECTION SPECIFICATIONS.

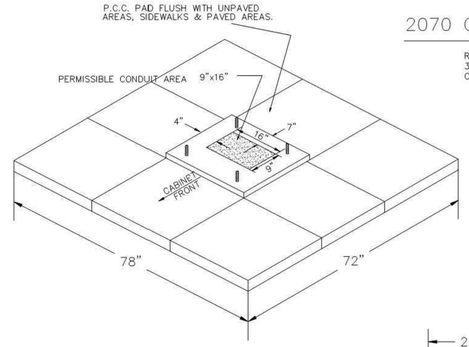

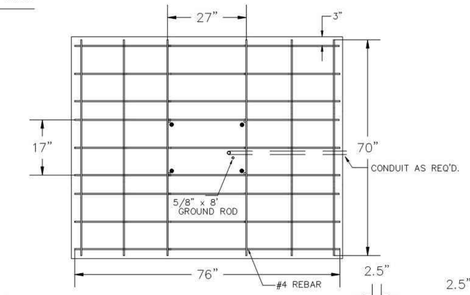

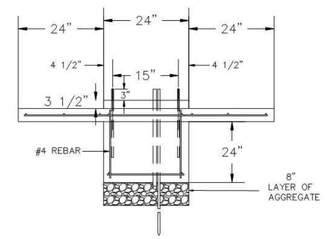

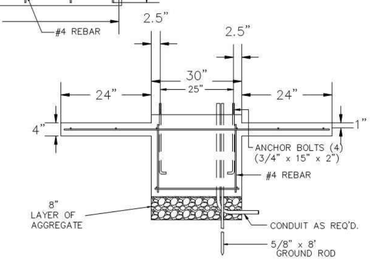

JUNCTION BOX DETAILS

PRE-FAB Junction Box (24" I.D. X 36" R.C.P.)

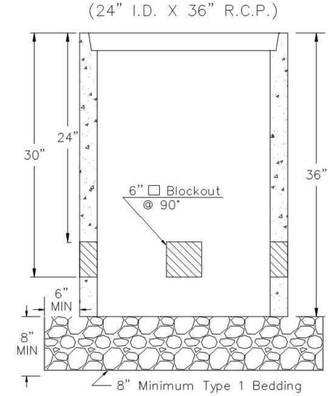

SECTION A–A

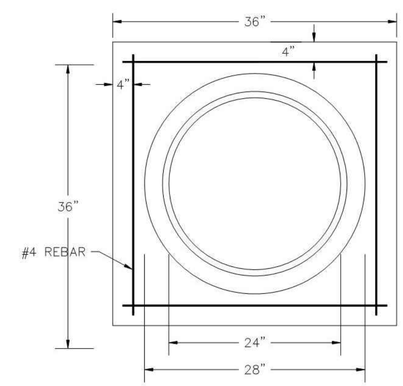

JUNCTION BOX CAP

36" x 36" x 6"
TOP OF CAP TO BE FLUSH WITH GROUND LEVEL.

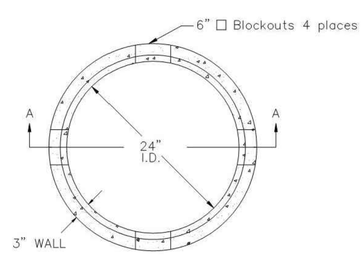

** SEE SERVICE BOX INSTALLATION FOR RING & COVER DETAILS.

NOTES:

SERVICE & JUNCTION BOX:

1. CONDUIT CONNECTION TO BE FLUSH TO WITHIN 5" OF INSIDE FACE OF SIDE WALL, CONDUIT TO DRAIN INTO SERVICE BOX.
2. CONDUIT CONNECTIONS TO SERVICE BOX SHALL BE TERMINATED WITH PLASTIC CABLE BUSHING.
3. CONDUIT SHALL BE SEALED WITH APPROVED SEALER AT INSIDE WALL FACE.
4. ALL SERVICE & JUNCTION BOXES TO HAVE 8" OF CRUSHED ROCK.

No 90 degree elbows unless approved by Traffic Maintenance

TRENCHING:

1. DEPTH TO BE 30" MINIMUM WITH ROCK & STUBBLE FREE BACKFILL TO SERVE AS BEDDING MATERIAL. MAINTAIN MINIMUM CONDUIT DEPTH IN TRENCH.
2. BACKFILL TO BE COMPACTED IN 6" LOOSE LIFTS BY HAND OR MECHANICAL TAMPING TO A 95% STANDARD DENSITY.

CONDUIT:

1. SLOPE CONDUIT TO DRAIN AS DIRECTED BY THE ENGINEER.
2. 3" RIGID STEEL CONDUIT BTWN. SERVICE BOXES.
   2" " " BTWN. SERVICE BOX AND POLE.
   1 1/4" " " BTWN. SERVICE & JUNCTION BOXES.
   3/4" " " BTWN. JUNCTION BOXES.
   3/4" " " BTWN. JUNCTION BOX & DETECTOR LOOP SAW CUT

No 90 degree elbows unless approved by Traffic Maintenance

CITY OF WICHITA
PUBLIC WORKS & UTILITIES ENGINEERING DIVISION

SERVICE/JUNCTION BOX, CONTOLLER PAD CONSTRUCTION/INSTALLATION

TRAFFIC ENGINEER
BRIAN COON, P.E.

PROJECT NUMBER	OCA NUMBER	DATE

CITY ENGINEER'S OFFICE
CITY HALL - SEVENTH FLOOR
455 NORTH MAIN STREET
WICHITA, KANSAS 67202-1620
(316) 268-4501

SHEET

REVISED AUGUST 2014

REV	DATE	DESCRIPTION	DSN	DWN	CHK
0	6-7-17	BID SET	KDB	KDB	

KEITH D. BEATY LICENSED 06-07-17 16978 KANSAS PROFESSIONAL ENGINEER

KAW VALLEY ENGINEERING
1104 E. 12TH AVENUE
EMPORIA, KANSAS 66801
PH. (620) 208-5240 | FAX (785) 762-7744
emp@kveng.com | www.kveng.com

KAW VALLEY ENGINEERING, INC. IS AUTHORIZED TO OFFER ENGINEERING SERVICES BY KANSAS STATE CERTIFICATE OF AUTHORIZATION # E-173.
EXPIRES 12/31/18

CENTRAL AND NIMS SIGNALIZATION
PROJECT NUMBER 472-85280
WICHITA, KANSAS

SERVICE/JUNCTION BOX, CONTROLLER PAD CONSTRUCTION/INSTALLATION

PROJ. NO.	F16D0205
DESIGNER	KDB
DRAWN BY	NMP
CFN	0205DET
SHEET	21 OF 36
REV	0

THIS DRAWING SHALL NOT BE UTILIZED BY ANY PERSON, FIRM, OR CORPORATION IN WHOLE OR IN PART WITHOUT THE SPECIFIC PERMISSION OF KAW VALLEY ENGINEERING, INC.