STANDARD WHEELCHAIR RAMP CONSTRUCTION DETAIL FOR STREETS WITH COMBINED CURB & GUTTER (TYPE A)

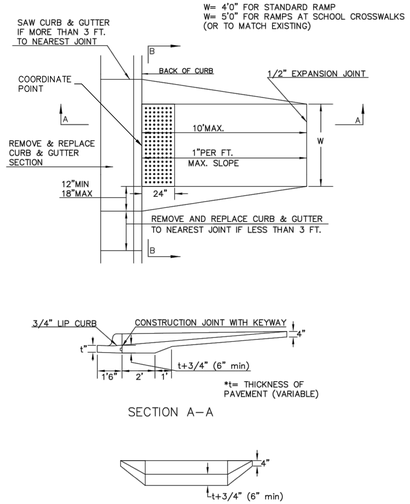

STANDARD WHEELCHAIR RAMP CONSTRUCTION DETAIL FOR CONCRETE STREETS WITH MONOLITHIC CURB (TYPE A)

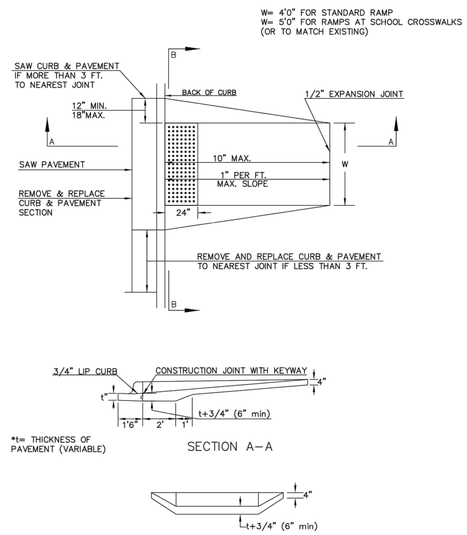

STANDARD WHEELCHAIR RAMP CONSTRUCTION DETAIL FOR STREETS WITH COMBINED CURB & GUTTER AND FULL WALK (TYPE B)

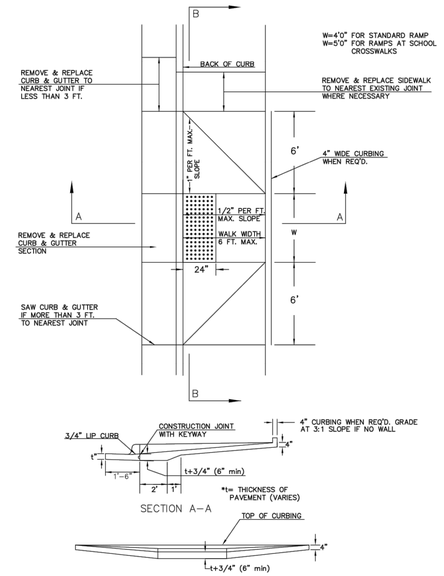

STANDARD WHEELCHAIR RAMP CONSTRUCTION DETAIL FOR STREETS WITH MONOLITHIC CURB AND FULL WALK (TYPE B)

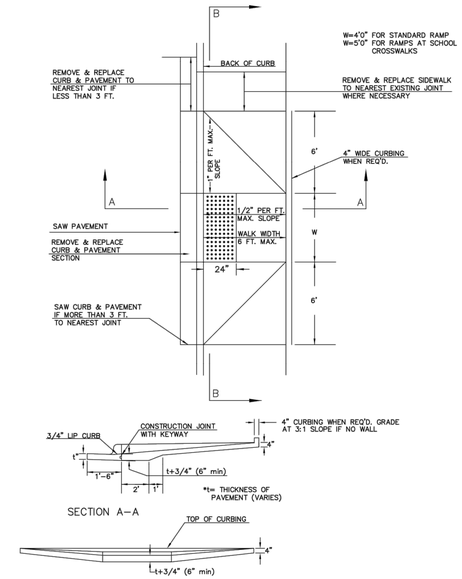

STANDARD WHEELCHAIR RAMP CONSTRUCTION DEAIL FOR STREET WITH COMBINED CURB AND GUTTER ON RADIUS WITH 6'± FROM BACK OF CURB TO PROPERTY CORNER (TYPE C)

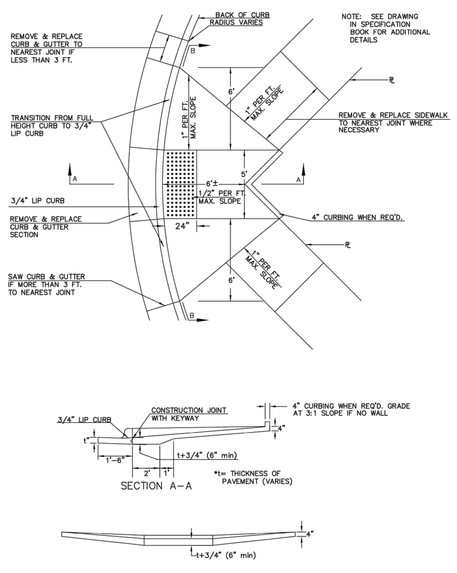

STANDARD WHEELCHAIR RAMP CONSTRUCTION DETAIL FOR STREET WITH MONOLITHIC CURB ON RADIUS WITH 6'± FROM BACK OF CURB TO PROPERTY CORNER (TYPE C)

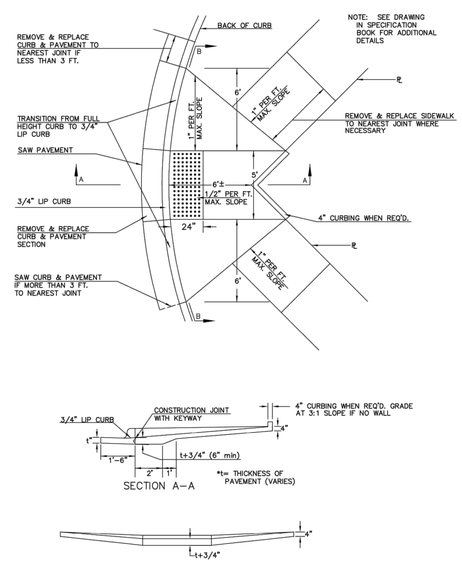

STANDARD WHEELCHAIR RAMP CONSTRUCTION DETAIL FOR STREETS WITH COMBINED CURB & GUTTER WITH ONE FULL SIDEWALK (TYPE D)

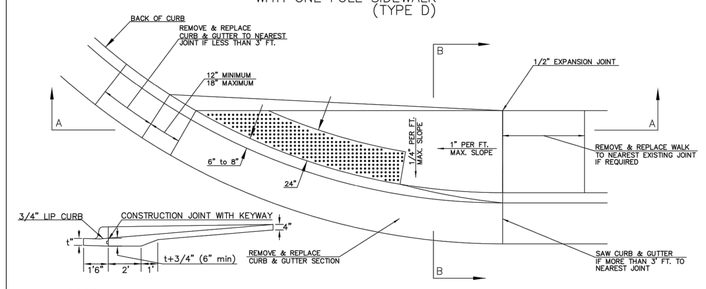

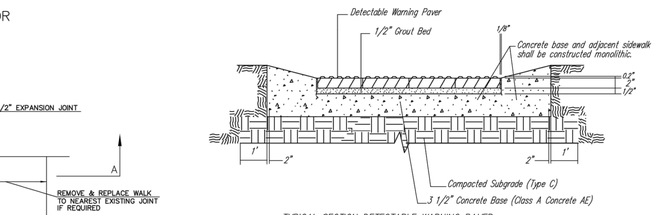

TYPICAL SECTION DETECTABLE WARNING PAVER
SECTION A–A

NOTE: HANOVER DETECTABLE WARNING PAVERS (OR AN APPROVED ALTERNATE) SHALL BE USED IN ALL WHEELCHAIR RAMPS. THE 11 3/4" RED 15' PAVER SHALL BE USED IN ALL APPLICATIONS.
HANOVER ARCHITECTURAL PRODUCTS
240 BENDER ROAD
HANOVER, PA 17331
1-717-637-0500
www.hanoverpavers.com

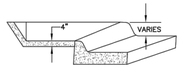

SECTION B–B

DOME DETAIL

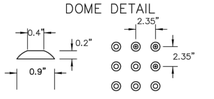

STANDARD WHEELCHAIR RAMP CONSTRUCTION DETAIL FOR STREETS WITH MONOLITHIC CURB WITH ONE FULL SIDEWALK (TYPE D)

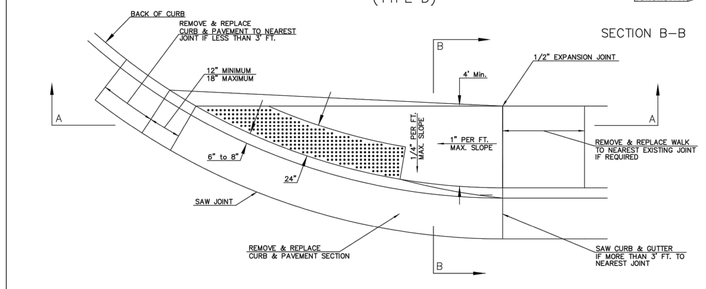

CITY OF WICHITA
PUBLIC WORKS & UTILITIES ENGINEERING DIVISION

WHEELCHAIR RAMP DETAILS WITH DETECTABLE WARNING

CITY ENGINEER
GARY JANZEN, P.E.

PROJECT NUMBER	OCA NUMBER	DATE
		08/2013

CITY ENGINEER'S OFFICE
CITY HALL - SEVENTH FLOOR
455 NORTH MAIN STREET
WICHITA, KANSAS 67202-1620
(316) 268-4501

SHEET _ of _

REV	DATE	DESCRIPTION	DWN	CHK
0	6-7-17	BID SET	KDB	DSN

KEITH D. BEATY LICENSED PROFESSIONAL ENGINEER 06-07-17 16978

KAW VALLEY ENGINEERING
1104 E. 12TH AVENUE
EMPORIA, KANSAS 66801
PH. (620) 208-5240 | FAX (785) 762-7744
emp@kveng.com | www.kveng.com
KAW VALLEY ENGINEERING, INC. IS AUTHORIZED TO OFFER ENGINEERING SERVICES IN KANSAS STATE CERTIFICATE OF AUTHORIZATION # E-113.
EXPIRES 12/31/18

CENTRAL AND NIMS SIGNALIZATION
PROJECT NUMBER 472-85280
WICHITA, KANSAS

HANDICAP RAMP DETAILS

PROJ. NO.	F16D0205
DESIGNER KDB	DRAWN BY NMP
CFN 0205DET	
SHEET 7 OF 36	REV 0

THIS DRAWING SHALL NOT BE UTILIZED BY ANY PERSON, FIRM, OR CORPORATION IN WHOLE OR IN PART WITHOUT THE SPECIFIC PERMISSION OF KAW VALLEY ENGINEERING, INC.