FHWA REGION NO.	STATE	PROJECT NO.	FISCAL YEAR	SHEET NO.	TOTAL SHEETS
7	KANSAS	U-0639-01	2017	5	58

HSIP - N063(801)

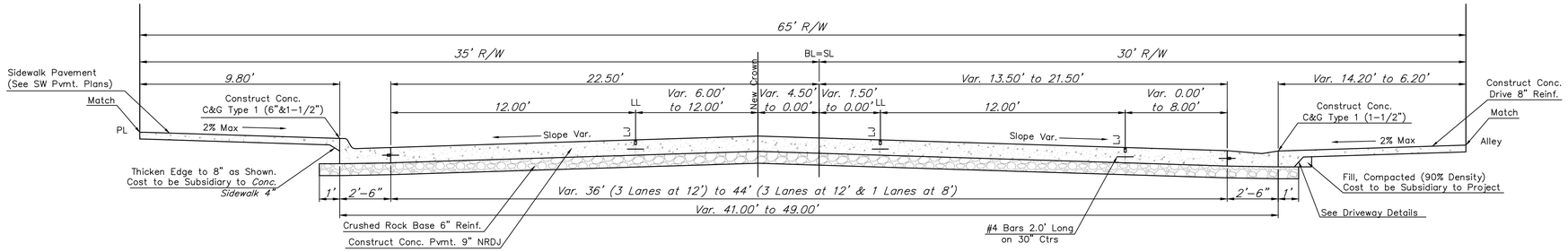

Hydraulic (See Sta. 21+53.45 to Sta. 21+98.50)

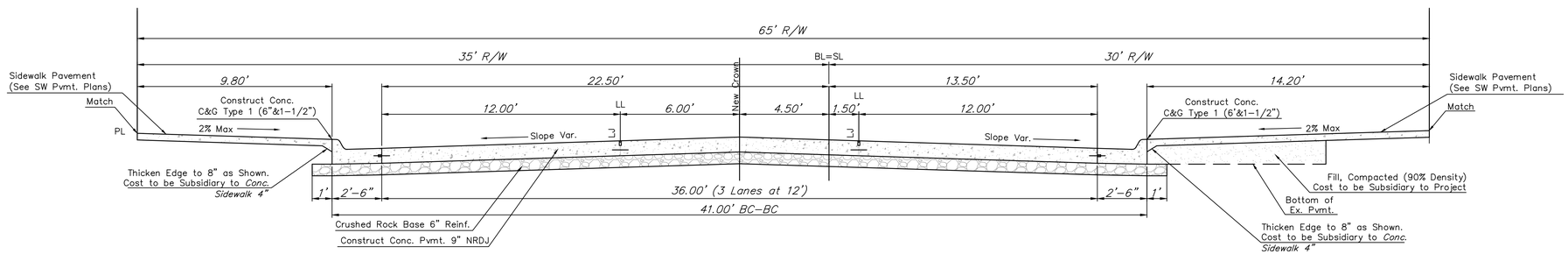

Hydraulic (See Sta. 20+55.45 to Sta. 21+53.45)

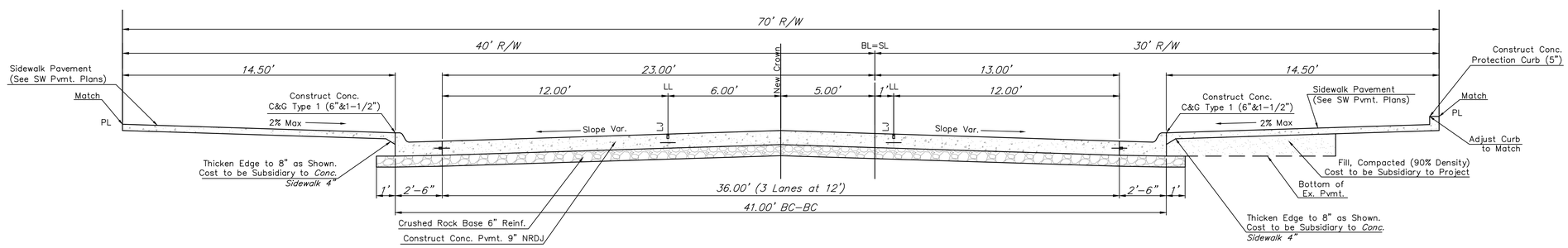

Hydraulic (See Sta. 18+20.00 to Sta. 19+36.25)

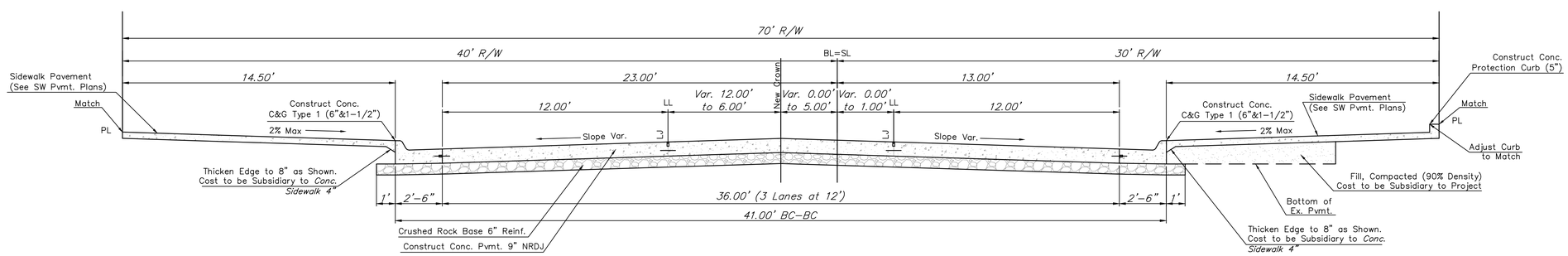

Hydraulic (See Sta. 17+48.08 to Sta. 18+20.00)

Drawing File: E:\Projects\Douglas (Washington to Grove)\Civil 3d\Douglas Base

MARCH, 2017

Design: Ken Klag
Drawn: LP
Approved: T Atiere
Scale: Not to Scale

Project No. 13-07-E933

CAPITAL IMPROVEMENT PROJECT

HYDRAULIC AVE.
TYPICAL PAVEMENT SECTIONS

DOUGLAS - WASHINGTON to GROVE

Baughman Company , P.A.
315 Ellis St. Wichita, KS 67211 P 316-262-7271 F 316-262-0149
ENGINEERING | SURVEYING | PLANNING | LANDSCAPE ARCHITECTURE

SHEET 5 OF 58