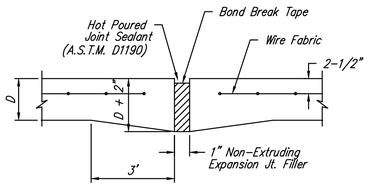

EXPANSION JOINT

NOTE: Extra Thickness to be Subsidiary to Price of Square Yards Pavement

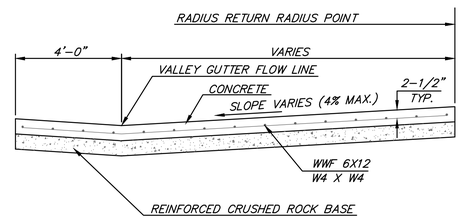

SECTION A-A

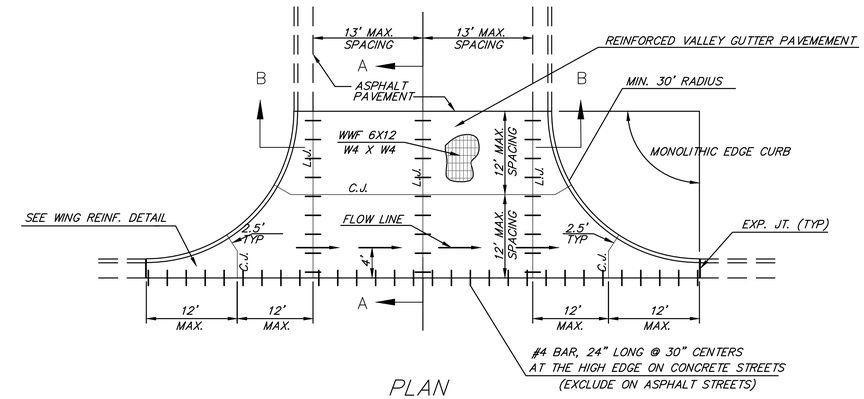

PLAN

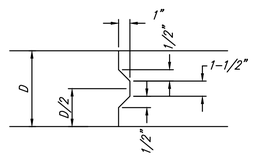

KEYWAY DETAIL

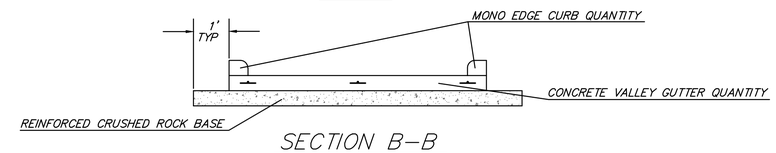

SECTION B-B

REINFORCED VALLEY GUTTER DETAIL

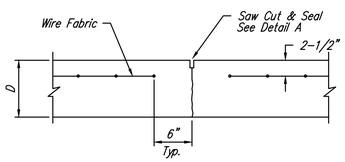

CONTRACTION JOINT DETAIL (C.J.)

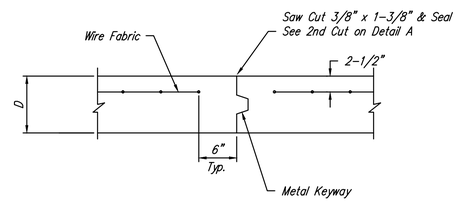

OPTIONAL CONTRACTION JOINT

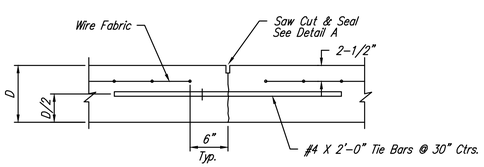

LONGITUDINAL JOINT DETAIL (L.J.)

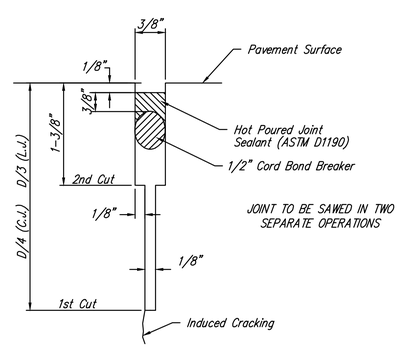

SAW JOINT DETAIL

(DETAIL A)

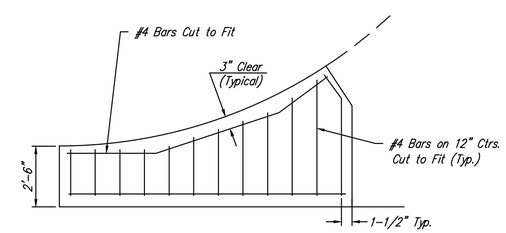

WING REINFORCING DETAIL

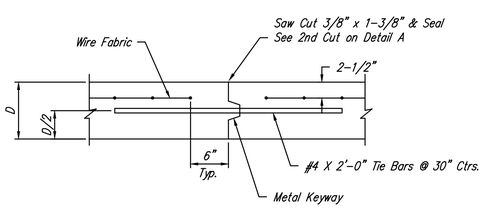

OPTIONAL LONGITUDINAL JOINT DETAIL (L.J.)

REVISION MAY 2017	SECTION B-B, ROCK EXTENDED ONE FOOT BEYOND PAVEMENT	
CITY OF WICHITA PUBLIC WORKS & UTILITIES ENGINEERING DIVISION	VALLEY GUTTER DETAILS CITY ENGINEER GARY JANZEN, P.E.	
	PROJECT NUMBER: 472-85342	OCA NUMBER: 766386 / DATE
	CITY ENGINEER'S OFFICE CITY HALL - SEVENTH FLOOR 455 NORTH MAIN STREET WICHITA, KANSAS 67202-1620 (316) 268-4501	SHEET 3 / 21

PV-109