FHWA REG NO.	STATE	PROJECT NO.	YEAR	SHEET NO	TOTAL SHEETS
7	KANSAS	87 N-0203-01	2003	12	48

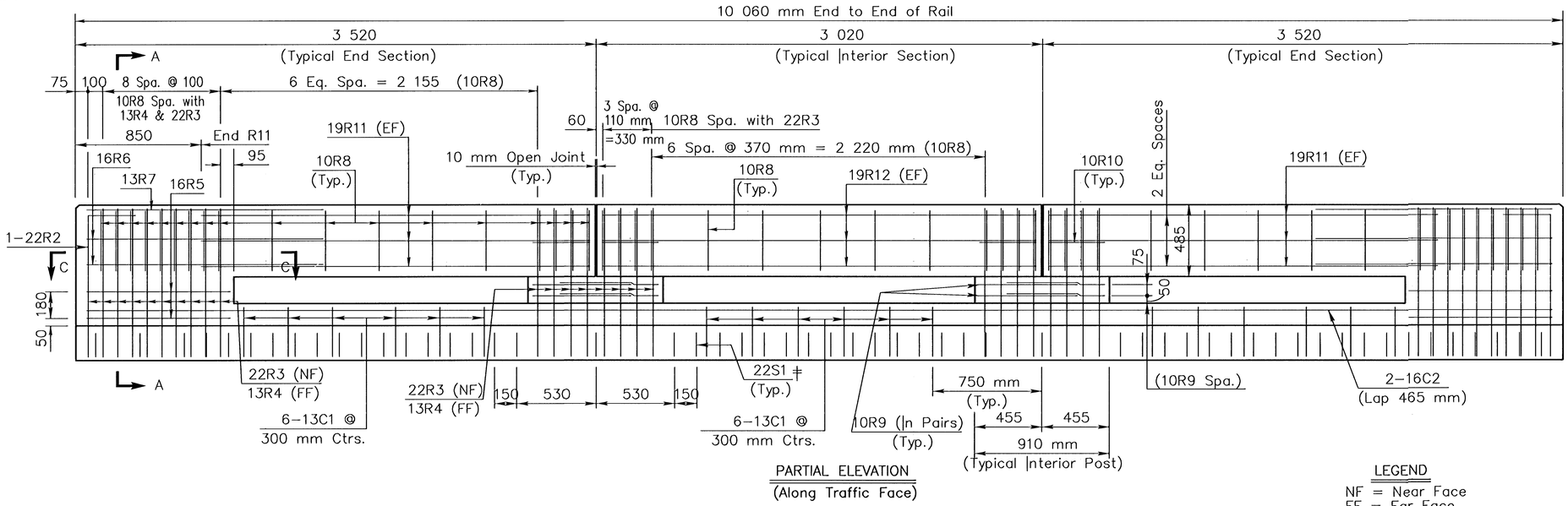

PARTIAL ELEVATION
(Along Traffic Face)

LEGEND
NF = Near Face
FF = Far Face
EF = Each Face

BILL OF REINFORCING STEEL
Epoxy Coated – Grade 420
(For Information Only)

	Straight Bars				Bent Bars			
	Mark	Size	Number	Length	Mark	Size	Number	Length
CORRAL RAIL	R11	19	24	2 610	R2	22	4	1 330
	R12	19	12	2 900	R3	22	68	2 530
	C2	16	4	9 910	R5	16	8	2 015
					R6	16	8	3 275
					C1	13	36	1 120
					R4	13	68	1 060
					R7	13	4	3 260
					R8	10	98	1 340
					R9	10	16	1 340
					R10	10	8	1 360
SLAB ‡	S2	19	44	9960	S1	22	136	6270
	S3	22	40	900				

Reinforcing Steel (Gr. 420)(Epoxy Coated)	4784 kg
Concrete Pavement (260 mm)(Unif)(AE)	63.4 sq. m

‡ See Conc. Pavement Sheet for additional reinforcing details

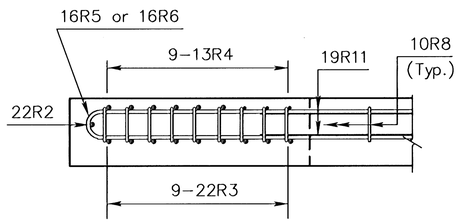

SECTION C–C

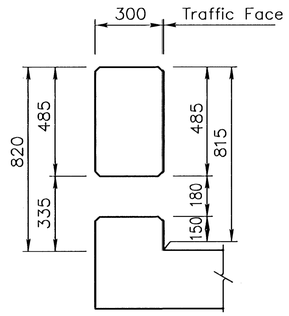

TYPICAL SECTION BETWEEN POST

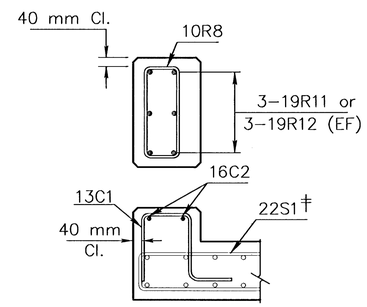

TYPICAL SECTION BETWEEN POST

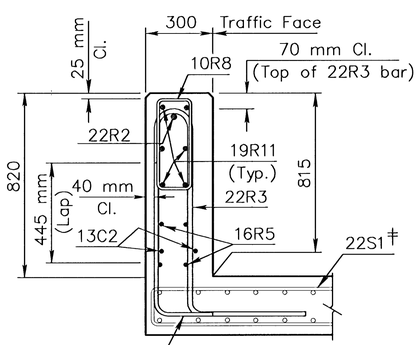

SECTION A–A

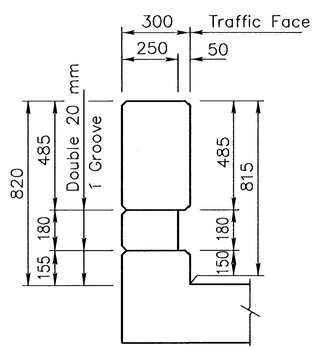

TYPICAL INTERIOR POST

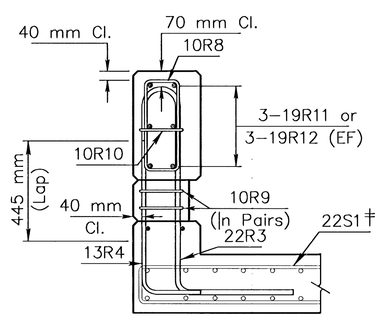

SECTION THRU INTERIOR POST

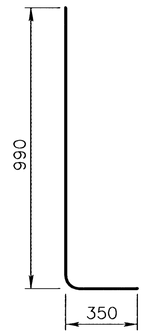

R2

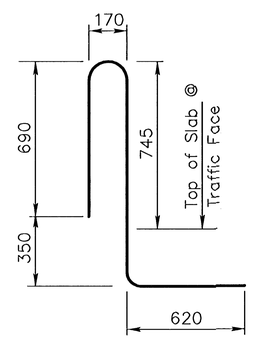

R3

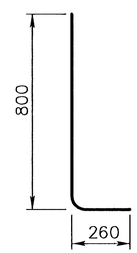

R4
(Lap 445 mm with R3)

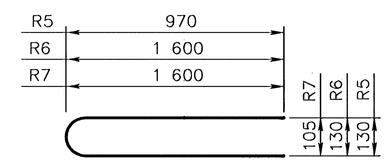

R5, R6, & R7

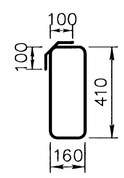

R8

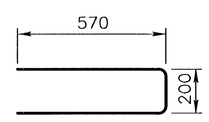

R9

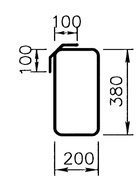

R10

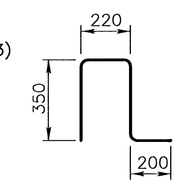

C1

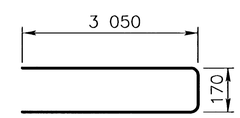

S1

BENDING DIAGRAMS
(All dimensions are out to out of bars.)

NO.	DATE	REVISIONS	BY	APP'D
2				
1				

KANSAS DEPARTMENT OF TRANSPORTATION
CORRAL RAIL DETAILS
BILL OF REINFORCING STEEL
PROJ. NO. 87 N-0203-01 SEDGWICK CO.

MKEC ENGINEERING CONSULTANTS, INC.
WICHITA, KANSAS

DESIGNED BY: KJS CHECKED BY: KJS
DRAWN BY: RSB DATE: JAN. 2003 SHEET 12 OF 48

G:\CIVIL\01079\DETAILS\01079RAL.DWG 01/16/2003 03:41:00 PM CST