STATE	PROJECT NO.	YEAR	SHEET NO.	TOTAL SHEETS
KANSAS	87 N-0203-01	2003	38.003	48

✳ ℄ 50 mm x 100 mm (Nominal) lifting slots at each end of section.

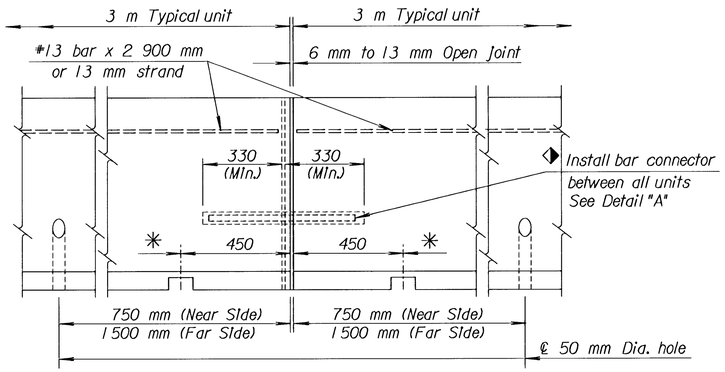

SIDE ELEVATION
(With dowel bar connector)

◆ For the convenience of the Contractor in replacing broken units, plate connectors as shown at the right may be used. At the Contractor's option, plate connectors may be used every 15 m in lieu of bar connectors. The Contractor shall use plates on both sides. When used, the Contractor may use either a 3 200 mm plate on the one side of the installed barrier unit or drill appropriate holes in the far side for dowels on the 1700 mm plate connector. This work is subsidiary to installing the barrier.

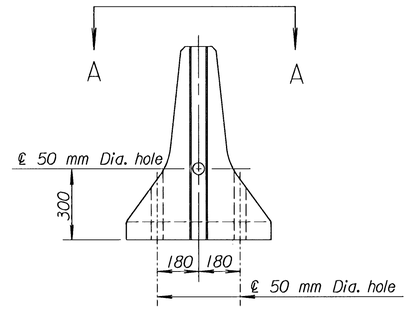

END ELEVATION
(With dowel bar connector)

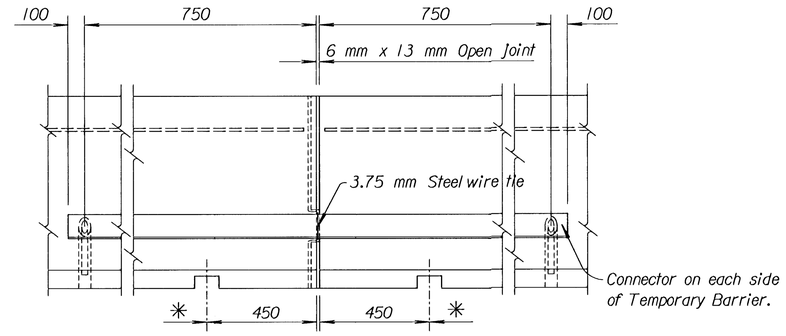

SIDE ELEVATION
(With plate connector)

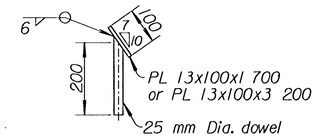

SECTION THRU CONNECTOR

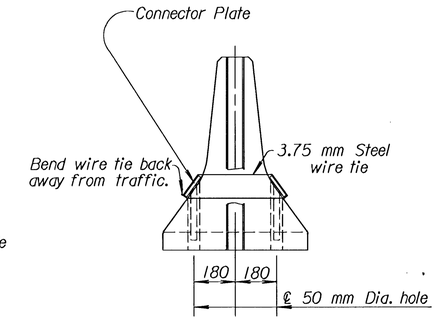

END ELEVATION
(With plate connector)

MATERIAL: Use Concrete Grade AAA (AE) throughout. All structural steel shall be merchant grade. Reinforcing steel shall be Grade 300 or Grade 420 billet steel and shall meet the requirements of the KDOT Standard Specifications.

SECTION: The section furnished must generally comply with dimensions shown. Requests for minor variations in section geometry and attachments may be submitted to the Engineer for approval.

LIFTING SLOTS: Lifting slots shall be constructed where specified on the plans to facilitate the drainage of water after installation on the roadway. Approximate mass of one unit equals 1 800 kg.

TEMPORARY CONCRETE SAFETY BARRIER: Furnishing and placing of all materials when required and all labor and equipment required to position the temporary barrier shall be included in the Contract unit price bid for "Traffic Control". Any relocation of the barrier required for the project shall be paid in accordance with the KDOT Special Provisions under the bid item "Traffic Control". Unless otherwise noted on the Plans the Temporary Safety Barrier shall becom the property of the Contractor and shall be removed from the site upon acceptance of the completed project.

SURFACE PREPARATION: Temporary concrete barriers shall be placed on either a concrete or bituminous surface. All loose dirt and sand shall be removed from the roadway surface just prior to placement of the safety barrier. Temporary barriers shall not be placed directly on soil or gravel.

SIGNING: For sign spacing, details of other traffic control devices and reference notes, see other sheets.

DELINEATION: Delineators shall be spaced on 30 m centers, except through curves having 580 m radius or less where they shall be spaced on 6 m centers.

All delineators shall be one of the following: Stimsonite 965 Y or W, Astro-Optics Model JD-1 or 2, Duraflex Model Flexx 2020, or an approved equivalent to those listed.

The delineation shall be mounted on the side of the Temporary Concrete Safety Barrier with two delineators at each location. Each delineator shall have a minimum height-to-width ratio of 1.75, and a minimum reflective surface area of 4 500 mm^2. The delineators shall be affixed to the Temporary Concrete Safety Barrier as recommended by the manufacturer.

Delineators shall be attached to bridge rail or other structures in construction zones when roadway is narrowed and traffic is adjacent to the structure. The method and location of placement shall be similar to temporary barrier delineation. All work and materials required for this installation shall be subsidiary to the bid item "Traffic Control".

When traffic flow is in one direction, the delineators shall be yellow when used on the left, and white when used on the right. When traffic flow is in both directions, delineators shall be placed back-to-back, and shall correspond to the color of the edge line.

The work and materials required for the installation of delineators shall be subsidiary to the Temporary Safety Barrier bid item.

TEMPORARY BARRIERS: Barriers constructed to the details of this drawing shall not be used in permanent installations.

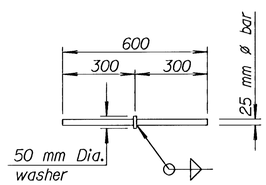

DETAIL "A"
(Showing 25 mm Φ bar & washer)

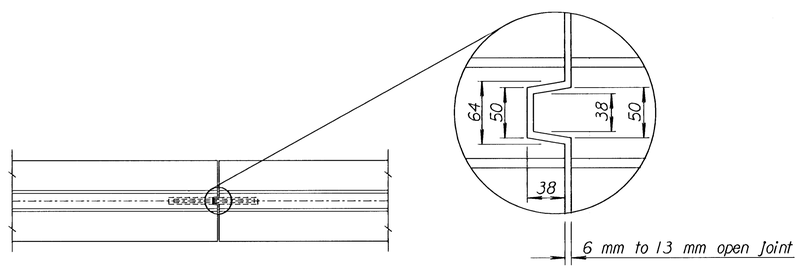

VIEW A-A

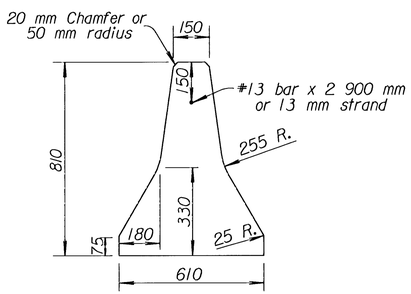

TYPICAL END SECTION

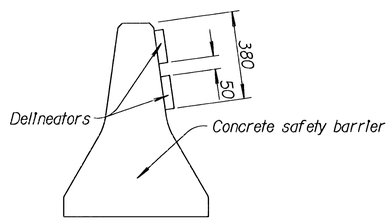

DELINEATOR DETAILS

◆ Type shall be either Type I or Type IV.

NO.	DATE	REVISIONS	BY	APP'D.
5	4-30-02	Rev. concrete from Class to Grade.	S.W.K.	J.O.B.
4	11-12-98	Revised concrete grade	R.J.S.	J.O.B.
3	4-10-98	Added Relocation Bid Item	R.J.S.	J.O.B.

KANSAS DEPARTMENT OF TRANSPORTATION

TEMPORARY CONCRETE SAFETY BARRIER TYPE I

~~RD640 SI~~

FHWA APPROVAL	5-01-02	APP'D. James O. Brewer	
DESIGNED	DETAILED	QUANTITIES	TRACED Bowser
DESIGN CK.	DETAIL CK.	QUAN.CK.	TRACE CK. Seitz

Drawn By : $$USERNAME$$ Plotted : $$$$$$SYTIME$$$$$$
File : $$$$$$$$$$$$$$$$DGNSPEC$$$$$$$$$$$$$$$$