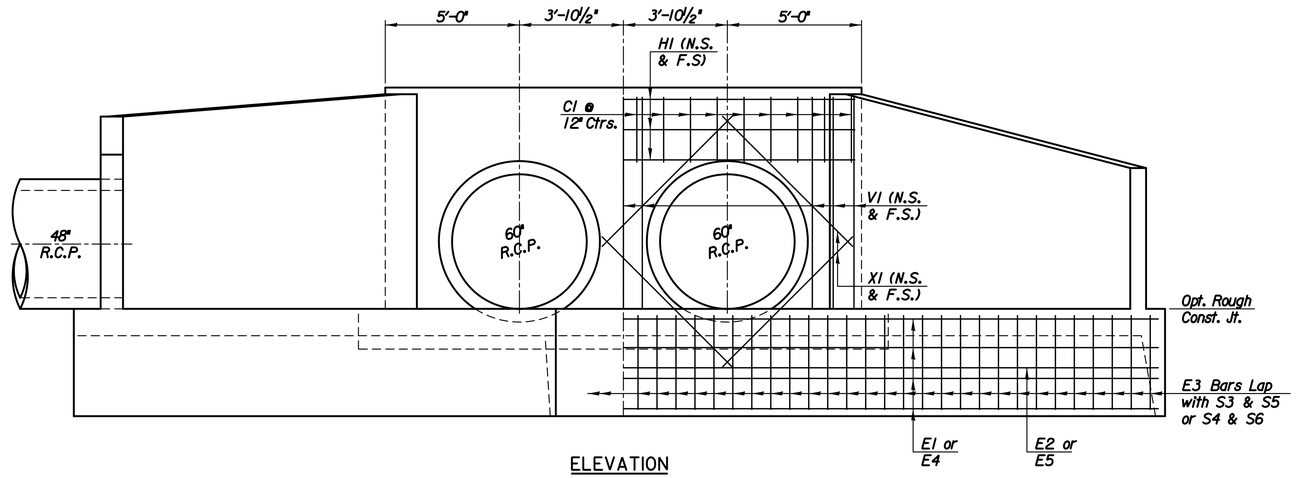

ELEVATION

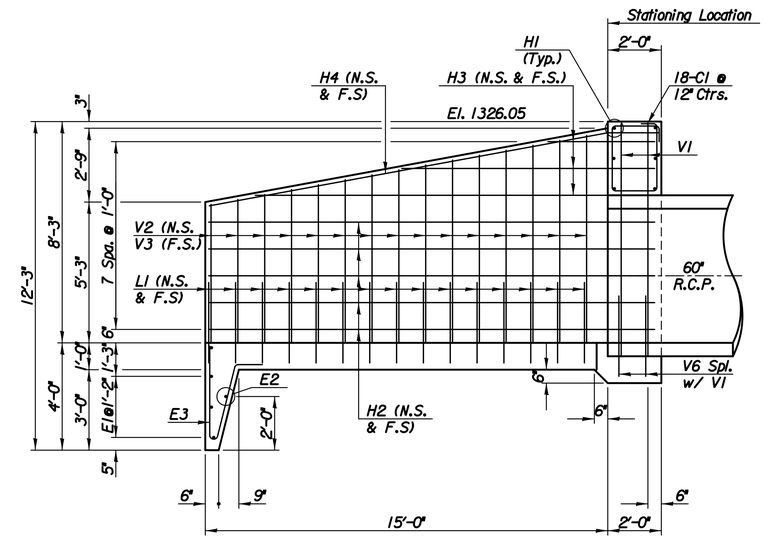

VIEW B-B

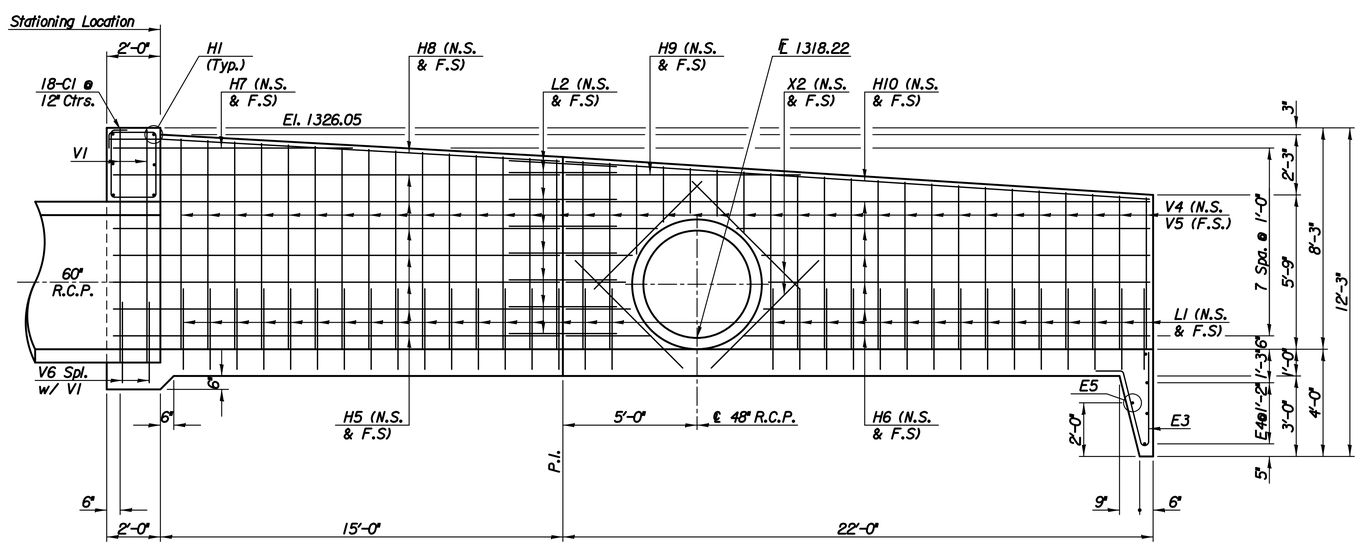

VIEW C-C

No.	Revision	By	Date

TYLER ROAD BETWEEN MAPLE AND CENTRAL
PAVING AND INCIDENTAL IMPROVEMENTS

CONCRETE HEADWALL DETAILS
2 of 2

GARY JANZEN, P.E. – CITY ENGINEER
CITY OF WICHITA PROJECT NO. 472-85282

PEC
PROFESSIONAL ENGINEERING CONSULTANTS, P.A.
303 SOUTH TOPEKA WICHITA, KS 67202
316-262-2691 www.pec1.com

Designed by	M.S.N.	Job No.	31-15956-000
Drawn by	W.L.L.	Date	JULY 2017

Sht. 35 of 96

Plotted By : wll 5-13-2017
Drawing Name : U:/Wichita-Civil/2015/15956/000/Trans/Bridge/DGN_Project/2-60 Headwall Elev.dgn