FHWA REGION NO.	STATE	PROJECT NUMBER	FISCAL YEAR	SHEET NUMBER	TOTAL SHEETS
7	KANSAS	87N-0080-01	1997	62	162

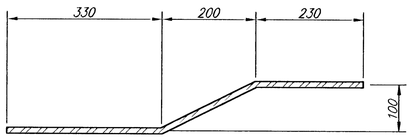

"B" BAR

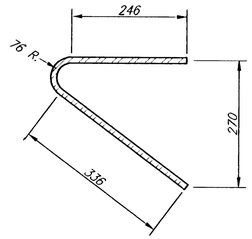

"A" BAR

BENDING DIAGRAM

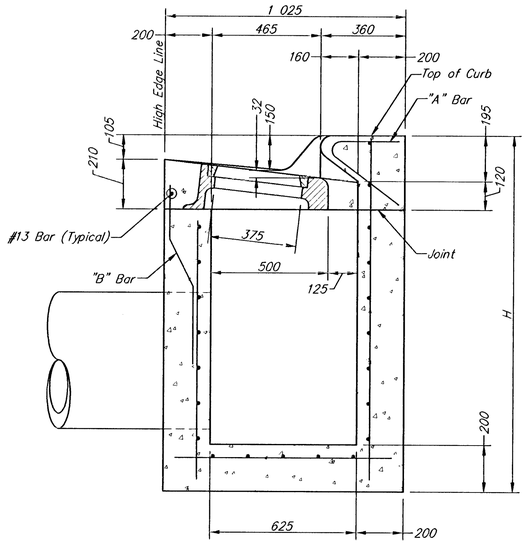

SECTION A-A

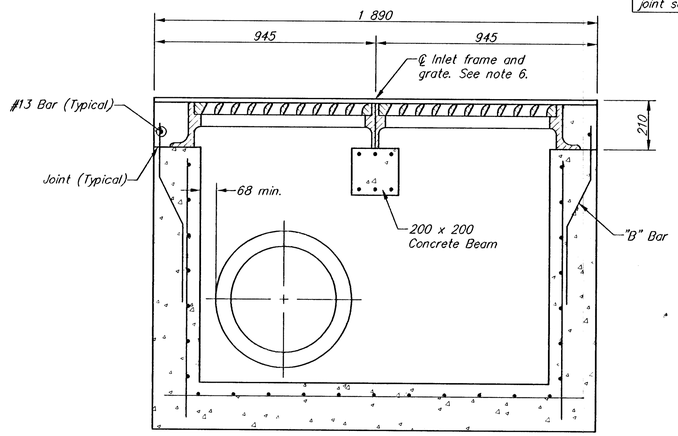

SECTION B-B

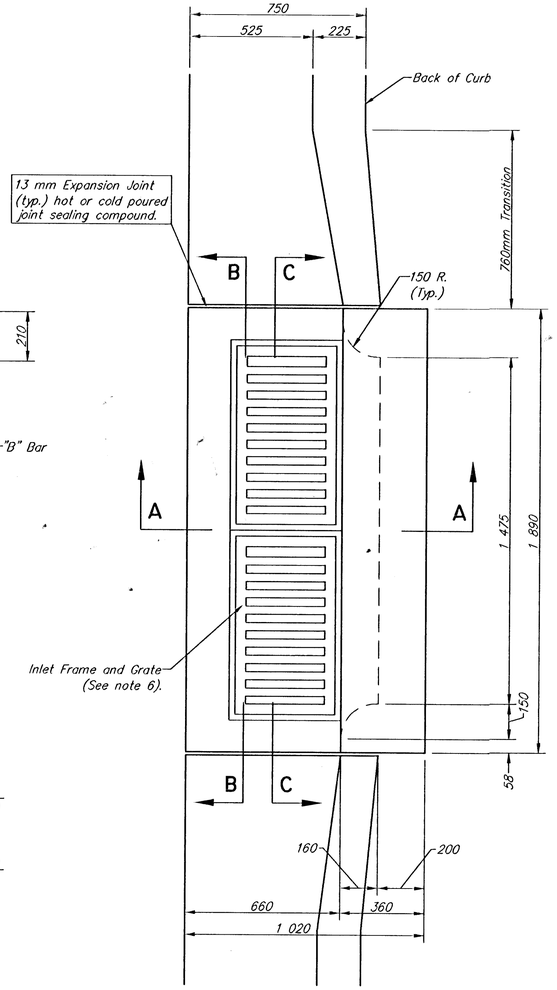

PLAN

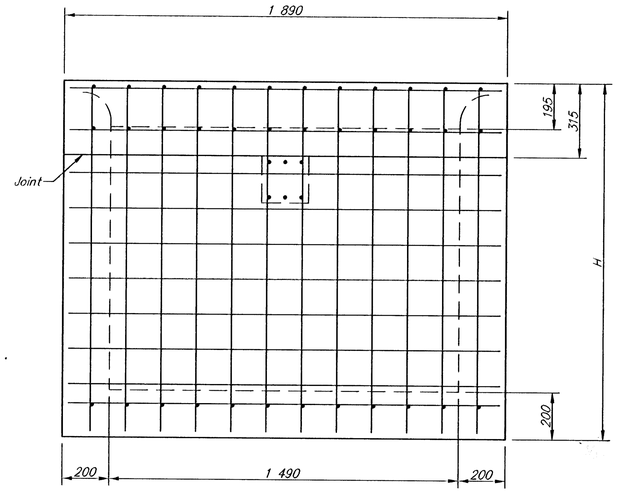

REAR WALL

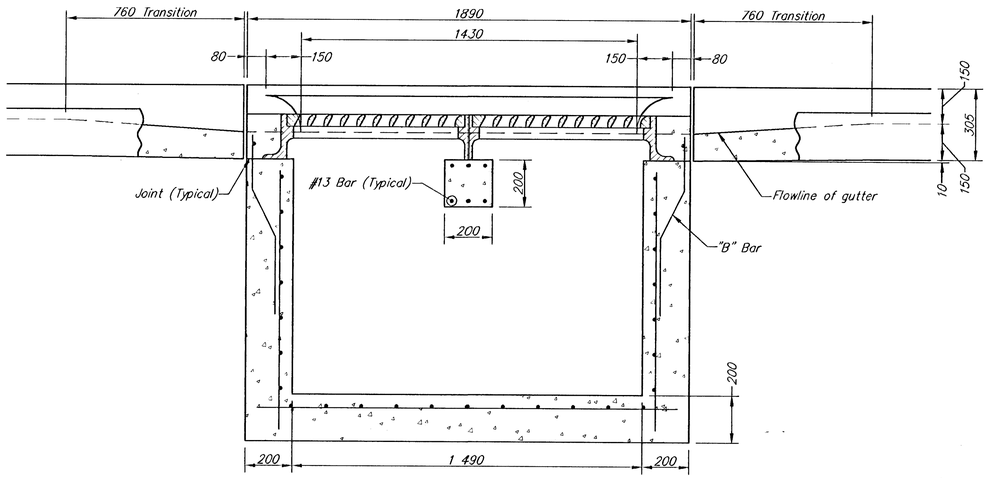

SECTION C-C

GENERAL NOTES

1. Use the concrete mix specified for the City of Wichita concrete pavement throughout. All exposed edges shall be finished with an edging tool. Reinforcing bars shall be bent around pipe.
2. Inlet invert shall be shaped with 8 sack mix concrete to create flow channels and to increase hydraulic efficiency such that the inlet will be self cleaning between all inlet and/or outlet pipes.
3. All bars are #13 with 150 mm spacing and shall have a minimum clearance of 25 mm unless otherwise noted on the plans.
4. When directed by the Engineer, a small opening may be required in the back of the inlet in order to drain a low area. Reinforcing bars will extend through the openings. No deductions in concrete quantities will be made for these openings.
5. No deductions will be made in pay length of curb, gutter, or curb and gutter through the inlet area.
6. Use Neenah R-3289-HV Single Inlet Frame and Grate or approved equal. Inlet frame to be proof load tested to 18145 kg on unsupported side.
7. Reinforcing bars shall be cut or bent around pipes. No deduction in concrete quantities shall be made for pipe openings.
8. The vanes of the grate shall be oriented with respect to the flow arrows shown on the plans.
9. Deeter Foundry, Inc. casting No. 2441 with style H grate is an approved equal to Neenah castings specified. Inlet drawing is based on Neenah castings and concrete walls and supports will require some field modifications to accommodate.

THE CITY OF WICHITA

CITY ENGINEER'S OFFICE
CITY HALL - SEVENTH FLOOR
455 NORTH MAIN STREET
WICHITA, KANSAS 67202
(316) 268-4501
(316) 268-4114 FAX

TYPE II CURB INLET
INLET OPENING
58 mm x 1475 mm

M. E. LINDEBAK P.E. – CITY ENGINEER

PROJECT NUMBER	INDEX CODE

DATE MAR 96 | SHEET 62 OF 162