FHWA REG NO.	STATE	PROJECT NO.	YEAR	SHEET NO	TOTAL SHEETS
7	Kansas	87N-0195-01	2001	36	127

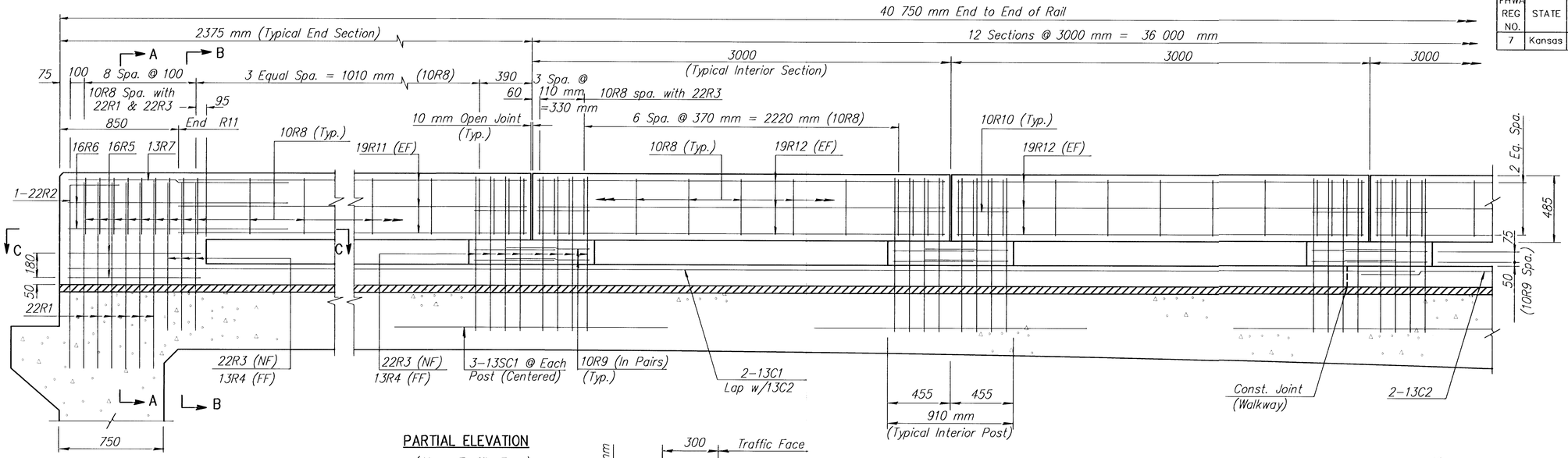

PARTIAL ELEVATION

(Along Traffic Face)

LEGEND

NF = Near Face
FF = Far Face
EF = Each Face

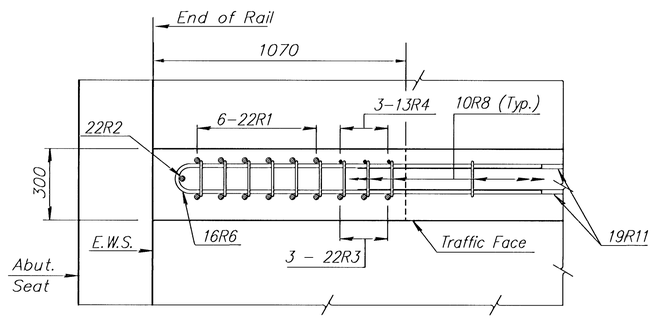

SECTION C-C

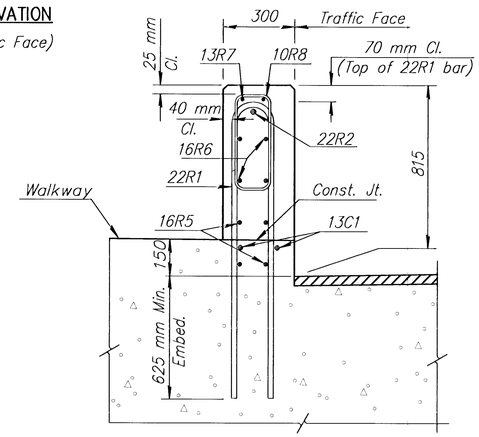

SECTION A-A

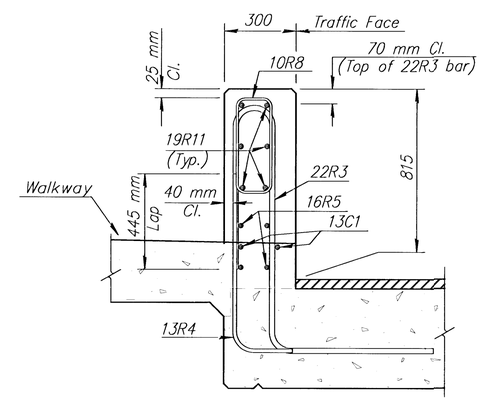

SECTION B-B

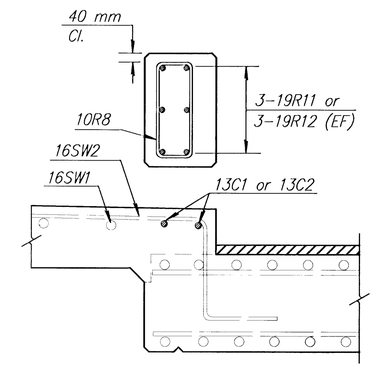

TYPICAL SECTION BETWEEN POSTS

NOTE

Cover all exposed surfaces of the Corral Rail and Posts above the walkway with the Concrete Masonry Coating. See the Superstructure Details sheet for additional areas.

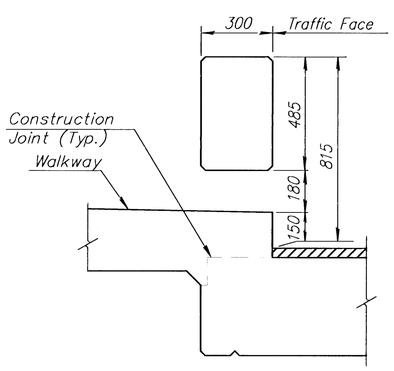

TYPICAL SECTION BETWEEN POSTS

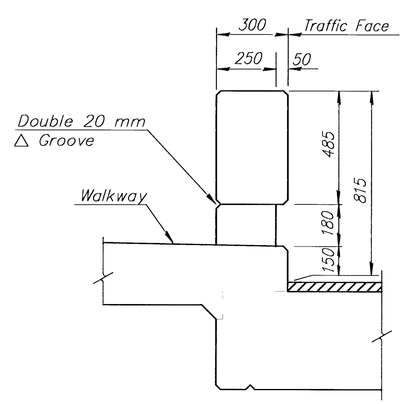

TYPICAL INTERIOR POST

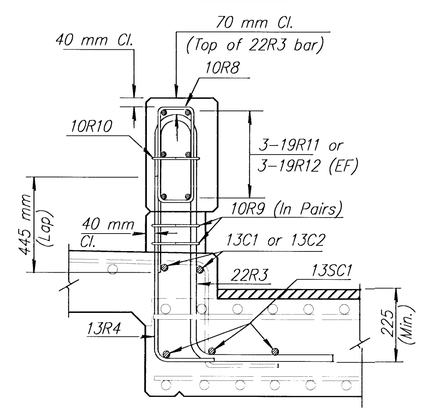

TYPICAL SECTION INTERIOR POST

SRB 924 NORTH MAIN WICHITA, KANSAS 67203 316-264-8008 FAX 264-4621
SAVOY, RUGGLES & BOHM, P. A.
ENGINEERING & SURVEYING

MKEC ENGINEERING CONSULTANTS
411 N. WEBB ROAD
WICHITA, KS. 67206
316-684-9600

MAPLE STREET BRIDGE (OVER CALFSKIN CREEK)
PROJECT NAME

CORRAL RAIL DETAILS
SHEET TITLE

MDK	DPG	KJS
DESIGN BY:	DRAWN BY:	CHECKED BY:
MAY 2001	00142RAL	36 / 127
DATE	DRAWING NAME	SHEET / OF

H:\CIVIL\00142\BRIDGE\00142RAL.DWG
H:\CIVIL\00142\BRIDGE\00142RAL.DWG Wed Oct 03 10:53:52 2001