FHWA REGION NO.	STATE	PROJECT NUMBER	FISCAL YEAR	SHEET NUMBER	TOTAL SHEETS
7	KANSAS	87N-0195-01	2001	60	127

	BY	DATE
REFERENCES NOTED		
REFERENCES CHECKED		

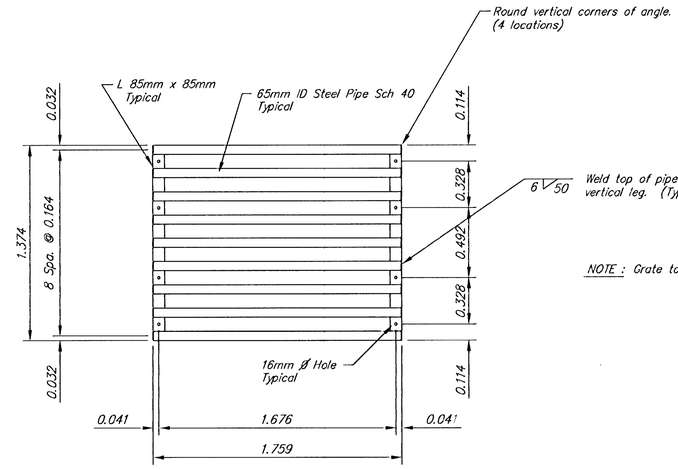

NOTE : Grate to be Galvanized after fabrication.

PIPE GRATE DETAILS

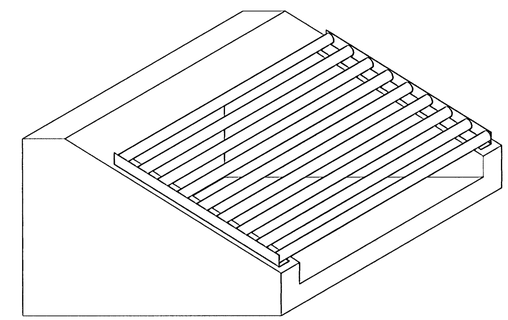

ISOMETRIC VIEW

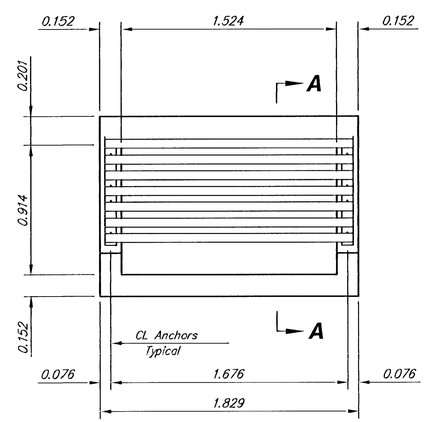

END VIEW

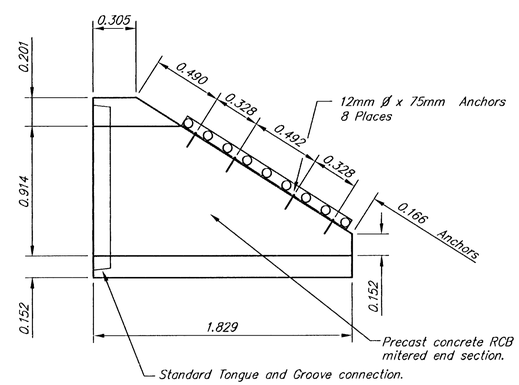

SECTION A-A

RCB END SECTION WITH GRATE DETAILS

SRB 924 NORTH MAIN WICHITA, KANSAS 67203 www.srb1.com
316-264-6009 FAX 264-6521 E-Mail: srb@srb1.com
SAVOY, RUGGLES & BOHM, P. A.
ENGINEERING & SURVEYING

PROJECT NUMBER 472-76-245-83262-000-000-001

DRAWN	DESIGN	REVIEW	DATE	UTILITY	SRB JOB
RA	T.C.R.		Sept. 27, 2001		1217T

REVISED

SHEET NO. of RCB end section 60 / 127