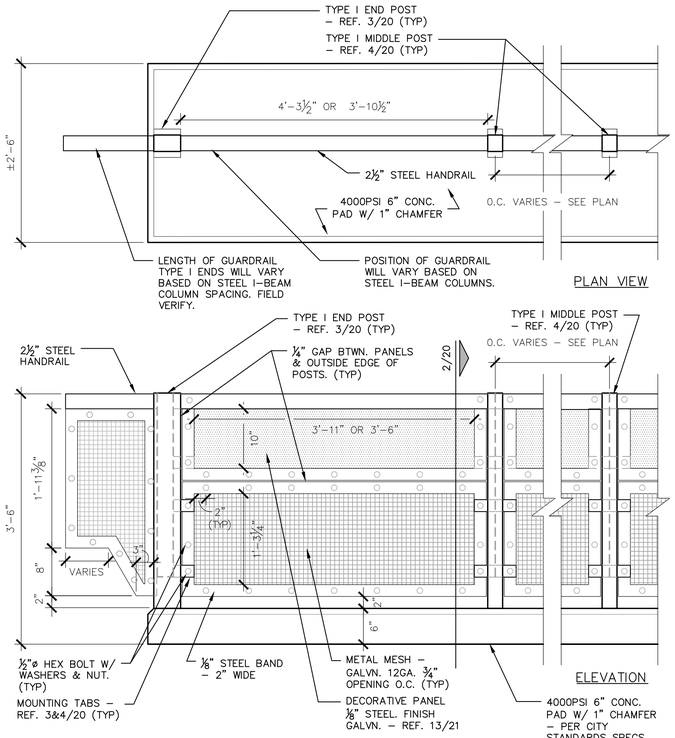

1 GUARDRAIL TYPE I - ELEVATION

1" = 1'-0"

- PROVIDE SHOP DRAWINGS FOR REVIEW.
- ALL METAL NON–STAINLESS STEEL PARTS TO BE GALVANIZED.
- UNLESS OTHERWISE SPECIFIED PAINT ALL METAL PARTS TO MATCH STEEL STRUCTURE UNDER BRIDGE.
- ALL BOLTS, WASHERS, NUTS, & THREADED RODS TO BE STAINLESS STEEL.

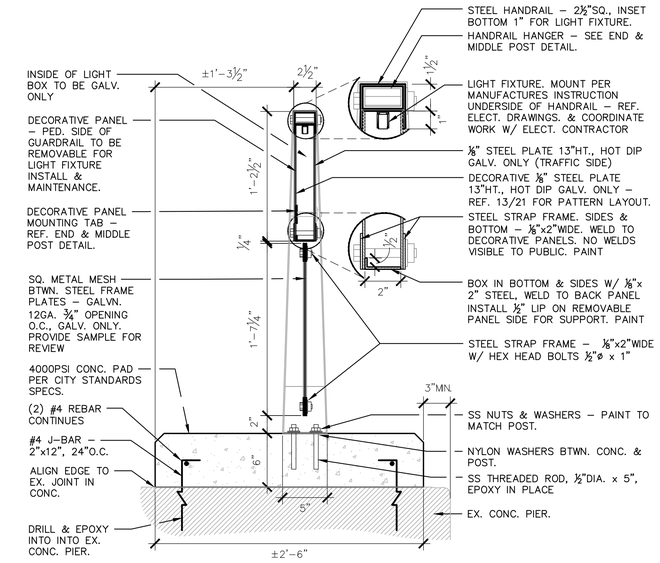

2 GUARDRAIL TYPE I - SECTION

1-1/2" = 1'-0"

- PROVIDE SHOP DRAWINGS FOR REVIEW.
- ALL METAL NON–STAINLESS STEEL PARTS TO BE GALVANIZED.
- UNLESS OTHERWISE SPECIFIED PAINT ALL METAL PARTS TO MATCH STEEL STRUCTURE UNDER BRIDGE.
- ALL BOLTS, WASHERS, NUTS, & THREADED RODS TO BE STAINLESS STEEL.

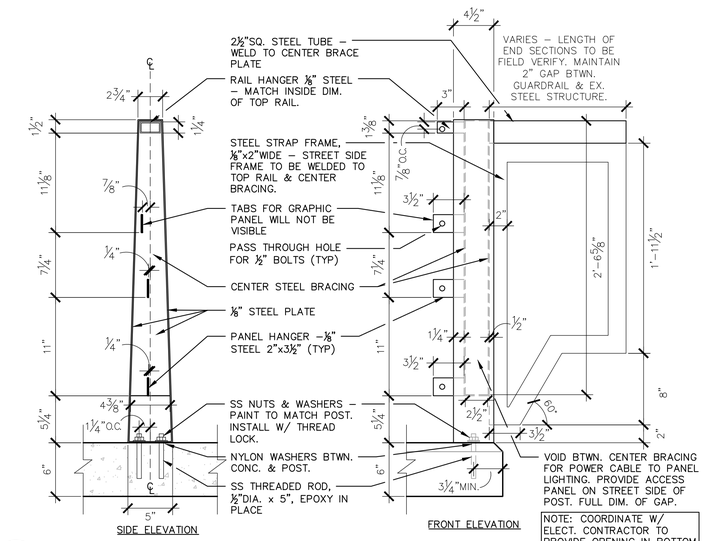

NOTE: COORDINATE W/ ELECT. CONTRACTOR TO PROVIDE OPENING IN BOTTOM OF PANEL FOR POWER.

3 GUARDRAIL TYPE I - END POST

1-1/2" = 1'-0"

- PROVIDE SHOP DRAWINGS FOR REVIEW.
- ALL METAL NON–STAINLESS STEEL PARTS TO BE GALVANIZED.
- UNLESS OTHERWISE SPECIFIED PAINT ALL METAL PARTS TO MATCH STEEL STRUCTURE UNDER BRIDGE.
- ALL BOLTS, WASHERS, NUTS, & THREADED RODS TO BE STAINLESS STEEL.

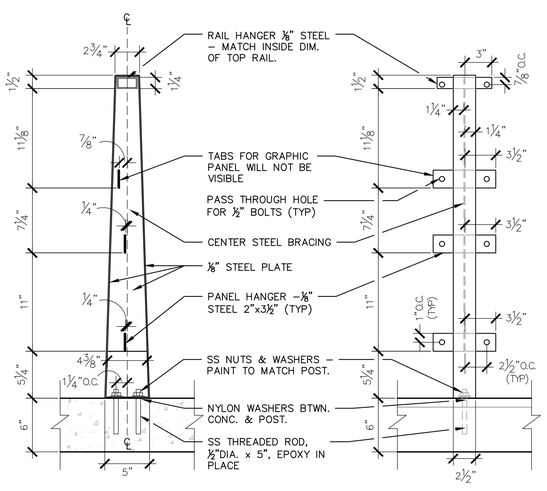

4 GUARDRAIL TYPE I - MIDDLE POST

1-1/2" = 1'-0"

- PROVIDE SHOP DRAWINGS FOR REVIEW.
- ALL METAL NON–STAINLESS STEEL PARTS TO BE GALVANIZED.
- UNLESS OTHERWISE SPECIFIED PAINT ALL METAL PARTS TO MATCH STEEL STRUCTURE UNDER BRIDGE.
- ALL BOLTS, WASHERS, NUTS, & THREADED RODS TO BE STAINLESS STEEL.

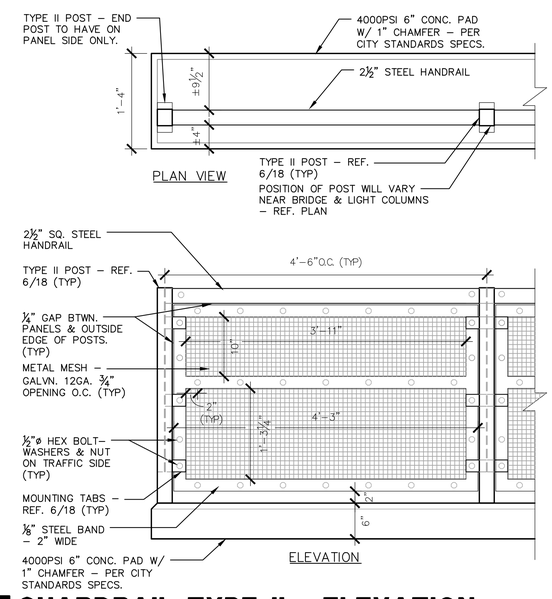

5 GUARDRAIL TYPE II - ELEVATION

1" = 1'-0"

- PROVIDE SHOP DRAWINGS FOR REVIEW.
- ALL METAL NON–STAINLESS STEEL PARTS TO BE GALVANIZED.
- UNLESS OTHERWISE SPECIFIED PAINT ALL METAL PARTS TO MATCH STEEL STRUCTURE UNDER BRIDGE.
- ALL BOLTS, WASHERS, NUTS, & THREADED RODS TO BE STAINLESS STEEL.

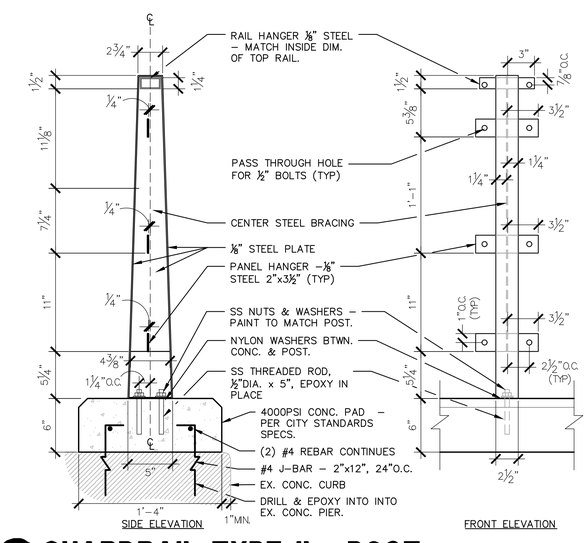

6 GUARDRAIL TYPE II - POST

1-1/2" = 1'-0"

- PROVIDE SHOP DRAWINGS FOR REVIEW.
- ALL METAL NON–STAINLESS STEEL PARTS TO BE GALVANIZED.
- UNLESS OTHERWISE SPECIFIED PAINT ALL METAL PARTS TO MATCH STEEL STRUCTURE UNDER BRIDGE.
- ALL BOLTS, WASHERS, NUTS, & THREADED RODS TO BE STAINLESS STEEL.

PRINTS ISSUED

DATE	PURPOSE	NO.
09.13.17	FOR CONSTRUCTION	

DOUGLAS AVE.-BNSF
RAILROAD UNDERPASS
IMPROVEMENTS
WICHITA, KS

LKArchitecture

Architecture • Engineering • Planning • Interior Design • Landscape Architecture

LK Architecture Inc. ©
345 RIVERVIEW, WICHITA, KS 67203
Phone (316) 268-0230 Fax: (316) 268-0205
CONTACT: JEFFREY A. BEST, PLA

PROJECT NUMBER: 17145

SHEET TITLE: GUARDRAIL DETAILS

SHEET NUMBER: 20