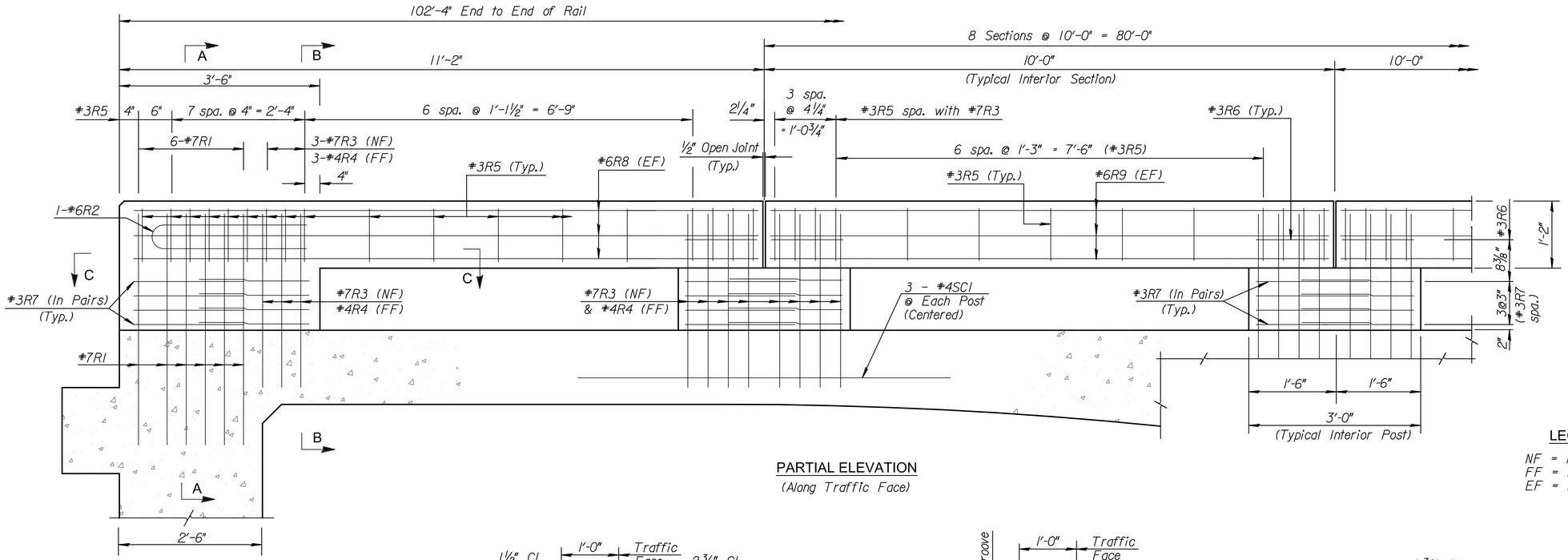

PARTIAL ELEVATION
(Along Traffic Face)

LEGEND
NF = Near Face
FF = Far Face
EF = Each Face

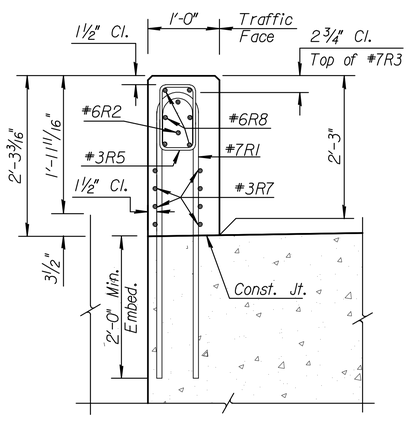

SECTION A-A
(Phase 3 Rail Shown)
(Abutment Extends beyond Phase 2 Rail)

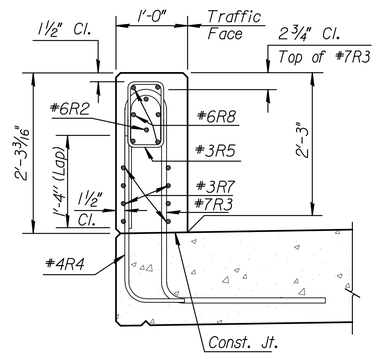

SECTION B-B

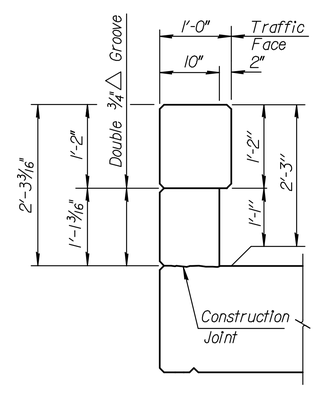

TYPICAL INTERIOR POST

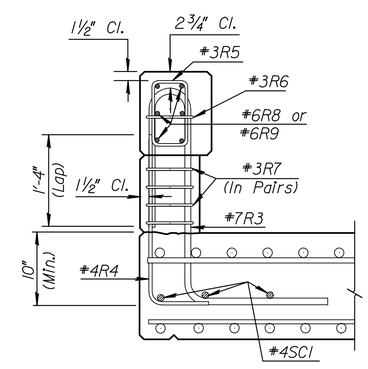

SECTION THRU POST

SUPERSTRUCTURE CONCRETE	
Concrete (Grade 4.0) (AE) (SA)	
Location	Quantity
Phase 2	5.60 Cu. Yds.
Phase 3	5.60 Cu. Yds.

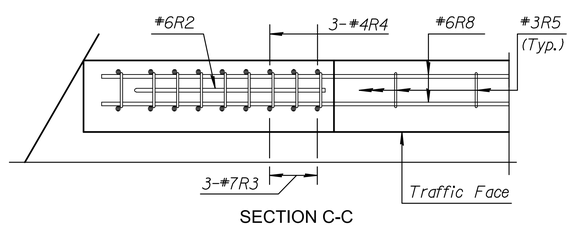

SECTION C-C
(South End of Phase 2 Rail & North End of Phase 3 Rail)
(Traffic Face and Clr. for Reinforcing mirrored for other ends)

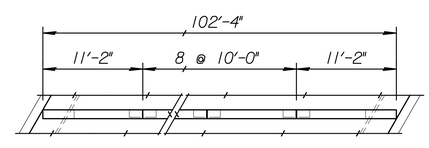

WEST RAIL PLAN

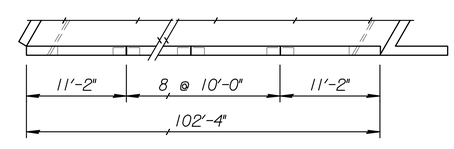

EAST RAIL PLAN

MKEC
Wichita, KS • 316-684-9600

STREET IMPROVEMENTS FOR
127TH STREET EAST
FROM 13TH STREET NORTH TO 21ST STREET NORTH

©2017
MKEC Engineering
All Rights Reserved
www.mkec.com
These drawings and their contents, including, but not limited to, all concepts, designs, & ideas are the exclusive property of MKEC Engineering (MKEC), and may not be used or reproduced in any way without the express consent of MKEC.

CORRAL RAIL DETAILS

PROJECT NO.	472-85158
DATE	11/29/17
SCALE	NTS

DESIGNED	DRAWN	CHECKED
KJS	DMU	KJS

NO.	REVISION	DATE

SHEET NO.
93 OF 183

Sh. No. 93

PLOTTED: Wednesday, November 29, 2017 @ 03:11PM
J:\PROJECTS\2014\140194029 - COW_127TH E 13TH TO 21ST\05-CIVIL\CAD\BRIDGE\142902D08.DWG