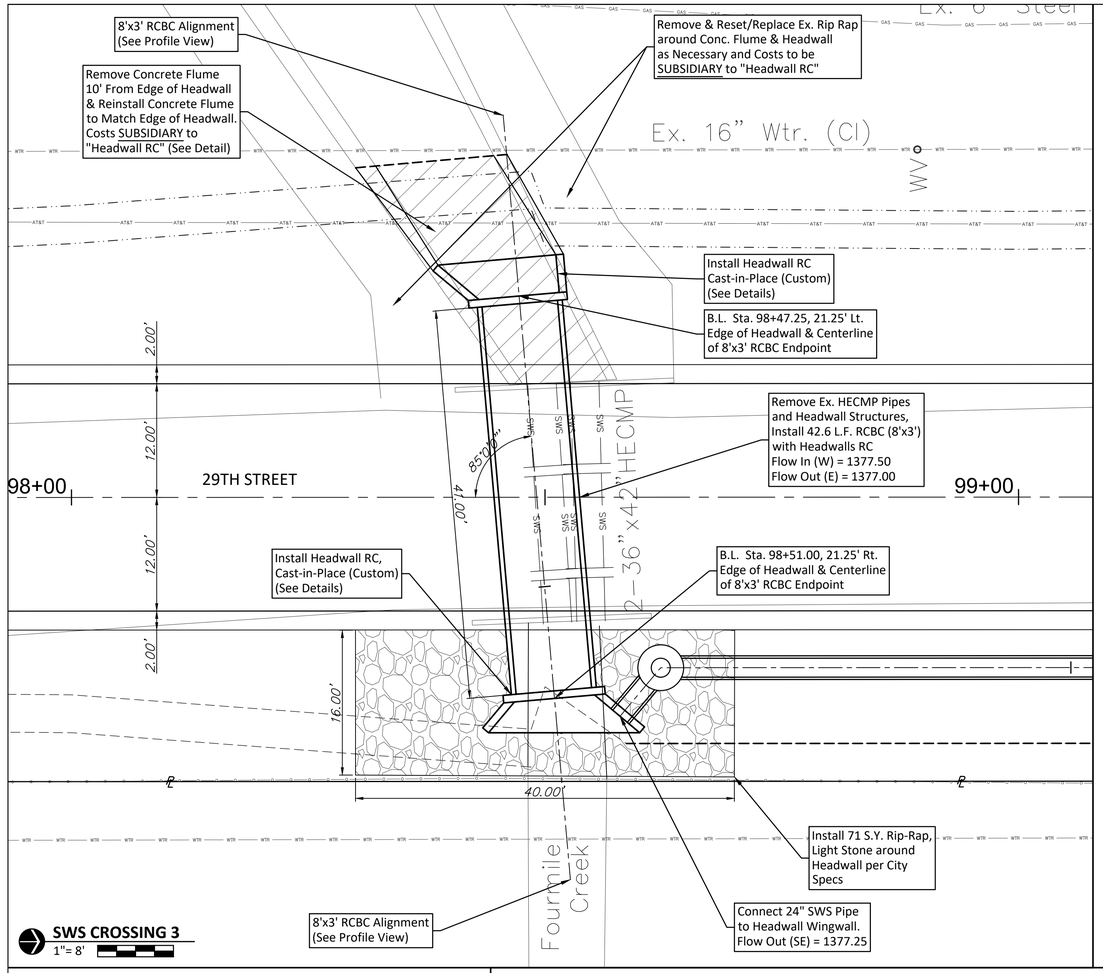


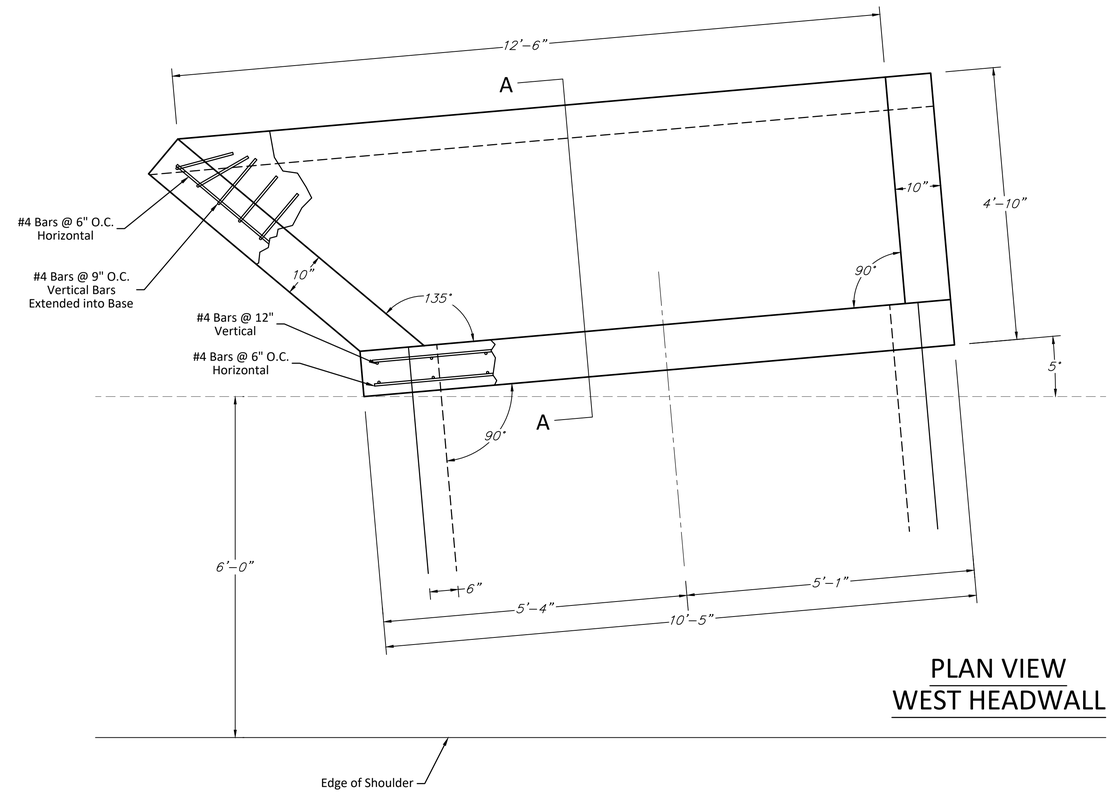


## PLAN VIEW
## WEST HEADWALL

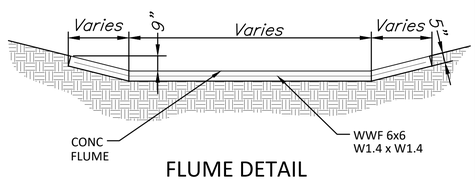


## FLUME DETAIL
NOT TO SCALE

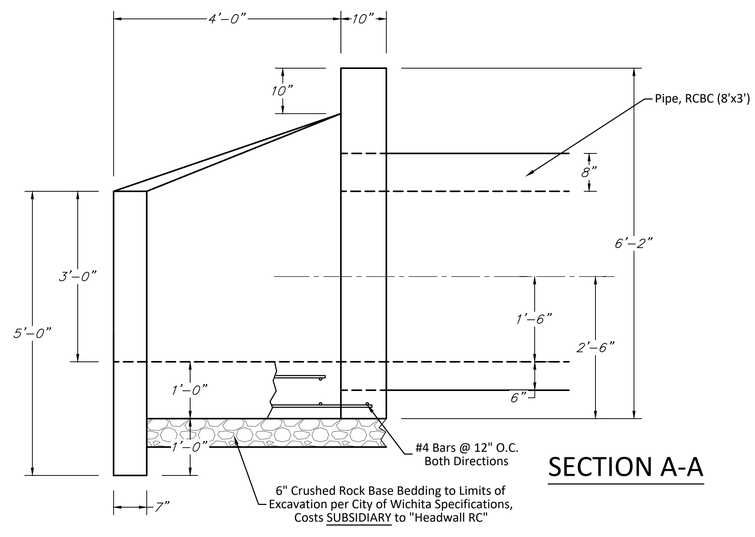


## SECTION A-A

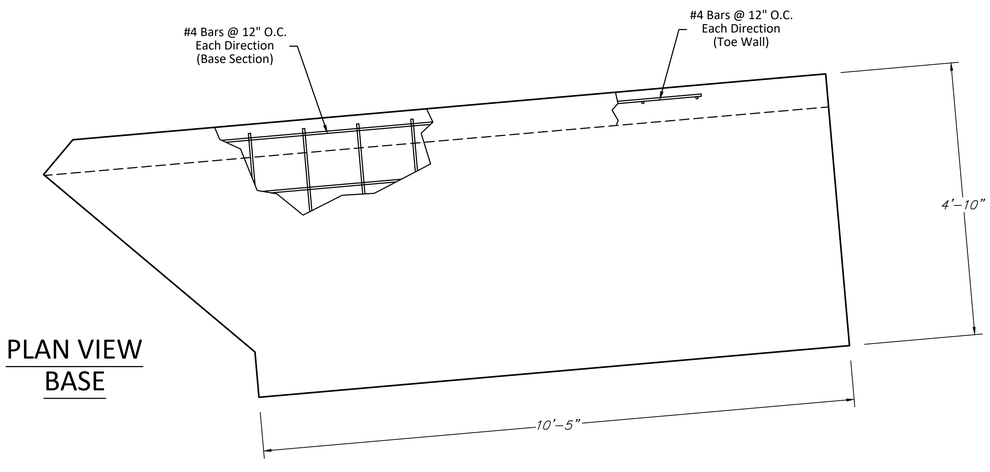


## PLAN VIEW
## BASE

BAUGHMAN COMPANY
315 Ellis St. Wichita, KS 67211 316-262-7271
BaughmanCo.com

CAPITAL IMPROVEMENT PROJECT
STORMWATER PLANS
SWS CROSSING 3
29TH & 127TH STREET PAVING

PROJECT NUMBER: 472-85341
INTERNAL NUMBER: 17-02-E657
DESIGN: LP
DRAWN: LP
DATE: Dec, 2017
SHEET 15 OF 39

file: G:\PROJECTS\127TH & 29TH PAVING, 17-02-E657\Dwg SUBPART BASE.DWG