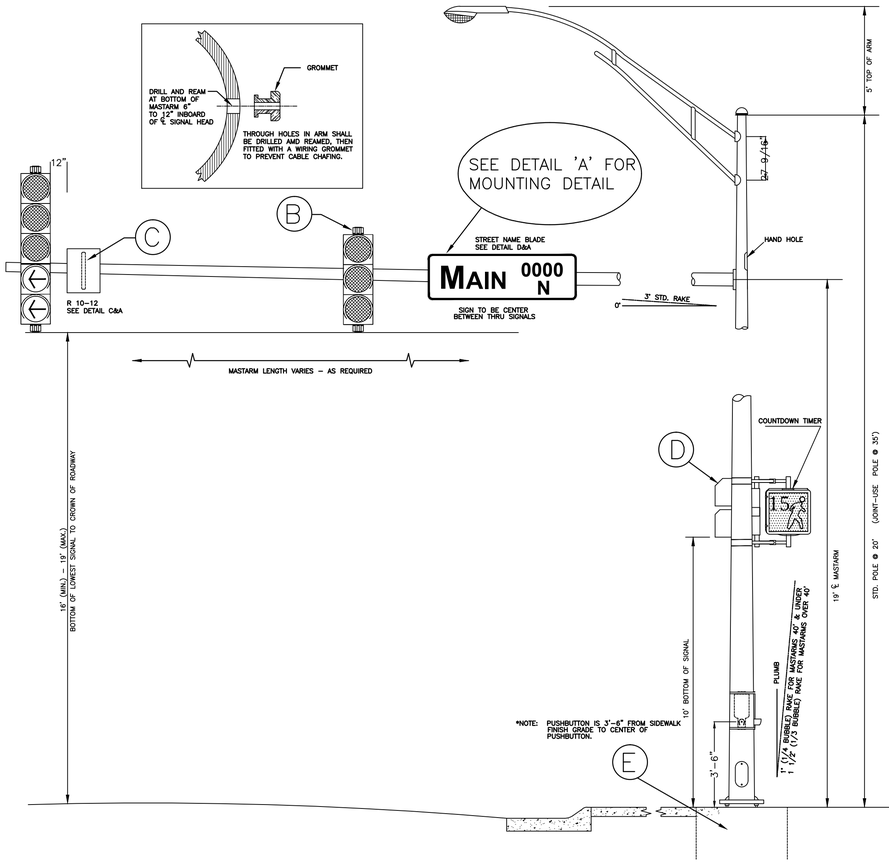

BANDED SIGN MOUNTING BRACKET DETAIL

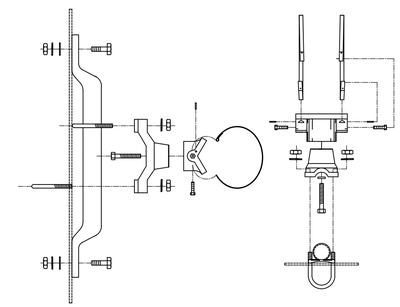

A

TYPE I SIGNAL MOUNTING BRACKET ASSEMBLY DETAIL

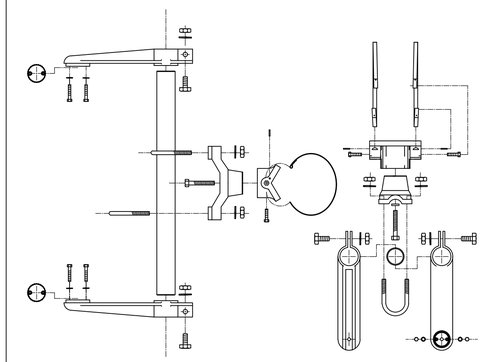

B

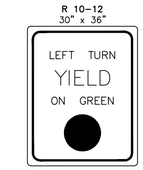

STANDARD SIGNING

C

DWG. NO.
N45AN0-X

PUSH BUTTON STATION

Message and Sound options include:
* Locating tone
* Verbal Street Name (Example: Crossing Main at Central)
* All features field selectable using a Configurator.

Construction :
* Die-cast aluminum, powder coated Black in color.
* Street Name in Braille in the directional arrow of the sign.
* Option "B" signing option.

Push button :
* ADA compliant
* Raised tactile arrow on the button
* Solid State switch rated at a Minimum of 20 million actuations

PLATE MARKING OPTIONS

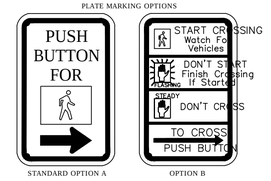

STANDARD OPTION A

OPTION B

TYPE III SIDE-OF-POLE MOUNTING BRACKET ASSEMBLY

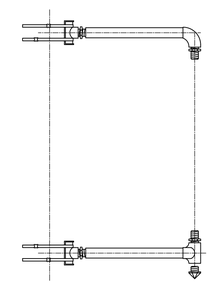

F

TYPE II SIGNAL MOUNTING BRACKET ASSEMBLY (SIDE-OF-POLE)

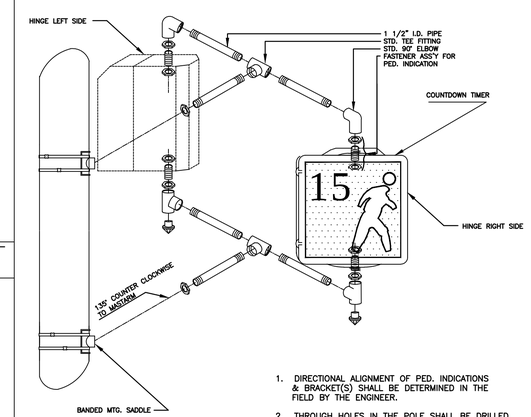

1. DIRECTIONAL ALIGNMENT OF PED. INDICATIONS & BRACKET(S) SHALL BE DETERMINED IN THE FIELD BY THE ENGINEER.
2. THROUGH HOLES IN THE POLE SHALL BE DRILLED AND WELL REAMED TO PREVENT CABLE CHAFING.
3. HINGE PEDESTRIAN SIGNAL DOORS AWAY FROM POLE.
4. CLAM SHELL BRACKETS ARE NOT ACCEPTABLE.

D

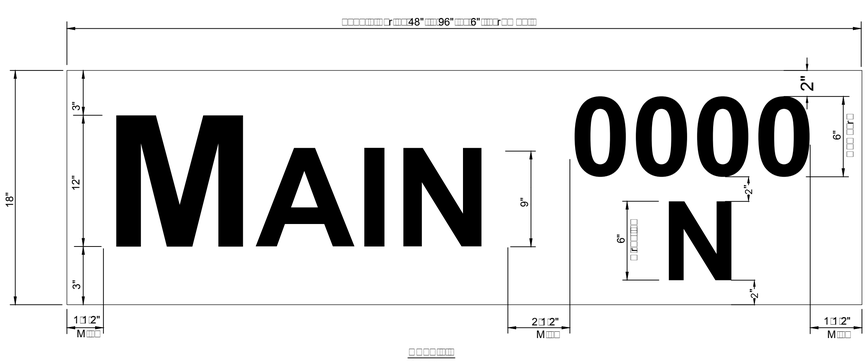

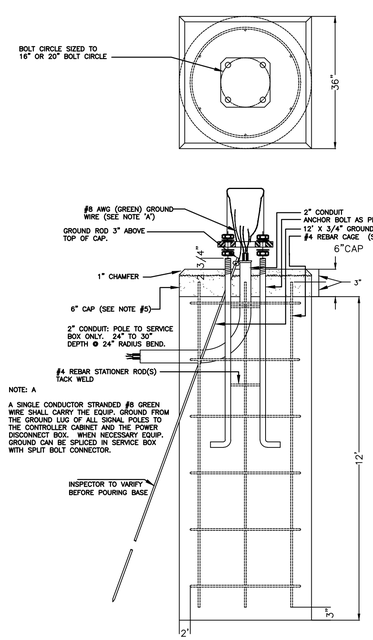

NOTE: A

A SINGLE CONDUCTOR STRANDED #8 GREEN WIRE SHALL CARRY THE EQUIP. GROUND FROM THE GROUND LUG OF ALL SIGNAL POLES TO THE CONTROLLER CABINET AND THE POWER DISCONNECT BOX. WHEN NECESSARY EQUIP. GROUND CAN BE SPLICED IN SERVICE BOX WITH SPLIT BOLT CONNECTOR.

NOTE:

1. THE ANCHOR BOLTS FOR THE SIGNAL POLE SHALL BE TACK WELDED TOGETHER IN A 16" OR 20" DIA. BOLT PATTERN (ON CENTERS AS SHOWN) TO MAINTAIN REQUIRED BOLT CONFIGURATION PATTERN AND TO AID IN VERTICAL POSITIONING WHILE CONCRETE BASE IS POURED.
2. USE ANTI-SEIZE COMPOUND ON ALL THREADS.
3. 12' x 3/4" GROUND ROD TO BE POSITIONED BEFORE POURING BASE.
4. CLASS 'A' CONCRETE SHALL BE USED TO CONSTRUCT BASE.
5. CONSTRUCT A 6" THICK x 36" SQUARE CONCRETE CAP AFTER POLE HAS BEEN ERECTED & PLUMBED. CHAMFER EDGE 1". MUST BE APPROVED BY ENG. BEFORE POURED.
6. CONDUIT SHALL HAVE PLASTIC (OR METAL) BUSHING (ABOVE BASE) TO PREVENT CABLE CHAFING.
7. USE #6 BARE COPPER GROUND CONDUCTOR FROM CLAMP TO GROUND BOLT IN ACCESS HOLE.

REBAR CAGE

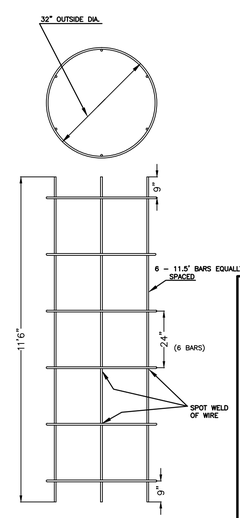

E

REVISED: AUGUST 2014

WICHITA

PUBLIC WORKS & UTILITIES
ENGINEERING DIVISION

STEEL SIGNAL POLE ASSEMBLY DETAILS

TRAFFIC ENGINEER
BRIAN A. COON, P.E.

PROJECT NUMBER	OCA NUMBER	DATE
		2017

CITY ENGINEER'S OFFICE
CITY HALL - SEVENTH FLOOR
455 NORTH MAIN STREET
WICHITA, KANSAS 67202-1620
(316) 268-4501

SHEET
43
of
110