STATE	PROJECT NO.	YEAR	SHEET NO.	TOTAL SHEETS
KANSAS	87 N-0287-01	2003	40	107

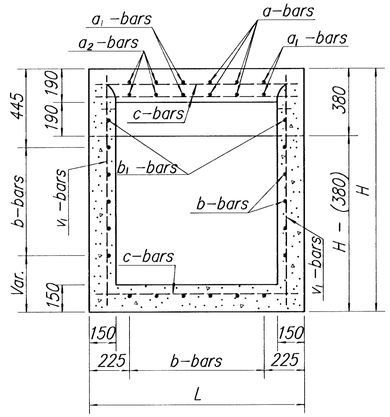

SECTION D-D

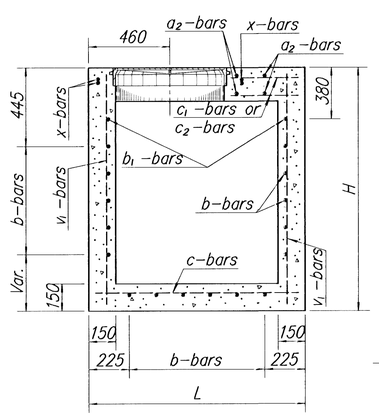

SECTION C-C

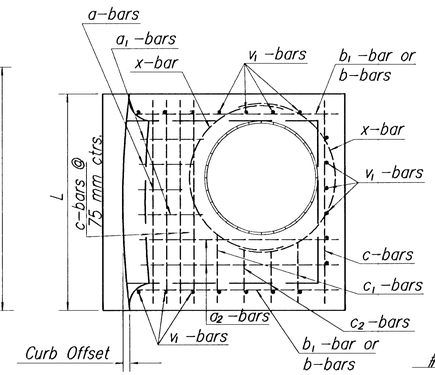

SECTION B-B

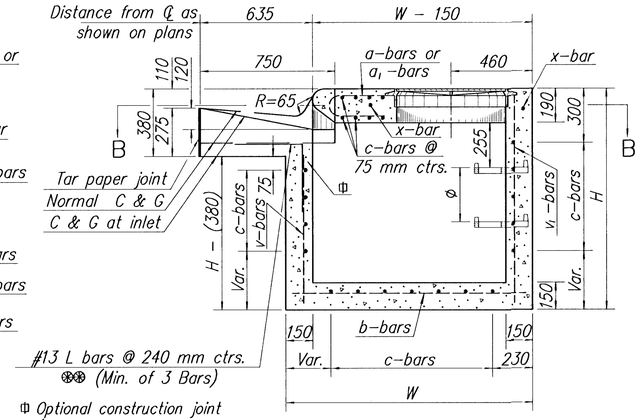

⊕ Optional construction joint (or tar paper joint if gutter is constructed free from inlet).

SECTION A-A

ø Steps shall be uniformly spaced. Spacing shall be 300 mm minimum and 420 mm maximum.

Note: All reinforcing shall be #13 at 150 mm centers except where noted. Minimum clear distance to reinforcement shall be 40 mm.

⊛⊛ At the Contractors option, gutter may be constructed continuous, L bars omitted, and a 13 mm Expansion joint installed between gutter and face of inlet and between curb and side of inlet with a tar paper joint between bottom of gutter and top of wall. In this method of construction, the inlet shall be completely free of the gutter and curb.

‡ Hot or cold poured joint sealing compound or premolded Exp. Jt. Filler (Nonextruding, Type B).

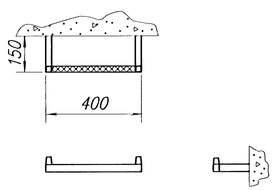

STEP DETAILS

LENGTH OF INLET (mm) \ RADIUS OF RETURN (m)	6	8	10	12	14	16	18
1 250	33	24	20	16	14	12	11
1 500	47	35	28	23	20	18	16
1 750	64	48	38	32	27	24	21
2 000		62	50	42	36	31	28
2 250			63	53	45	40	35
2 500				65	56	49	43
2 750					67	59	52
3 000						70	62

CURB OFFSETS (mm)

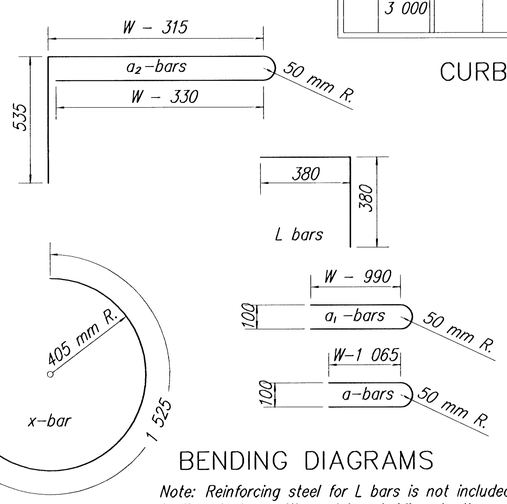

BENDING DIAGRAMS

Note: Reinforcing steel for L bars is not included in the steel quantity and is subsidiary to the other inlet items.

All dimension are out to out.

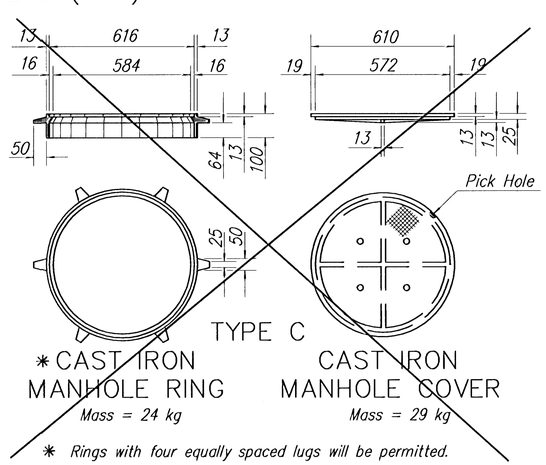

TYPE C

* CAST IRON MANHOLE RING

Mass = 24 kg

CAST IRON MANHOLE COVER

Mass = 29 kg

* Rings with four equally spaced lugs will be permitted.

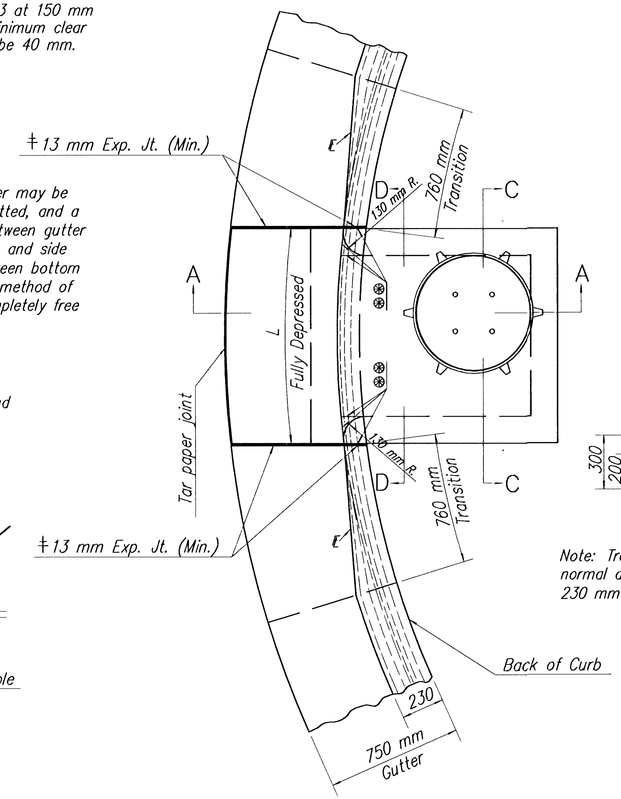

PLAN

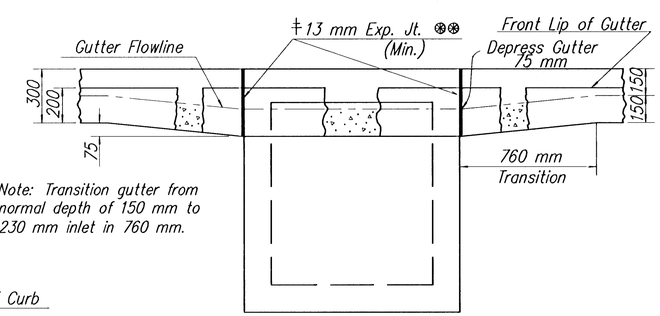

Note: Transition gutter from normal depth of 150 mm to 230 mm inlet in 760 mm.

ELEVATION

GENERAL NOTES

Grade 25 Concrete, Grade 25 Concrete (AE), or the mix used in Concrete Pavement, at the Contractor's option, shall be used throughout.

All exposed edges shall be finished with an edging tool.

Reinforcing bars shall be bent around pipe.

No reduction in concrete quantities shall be made for pipe openings.

When directed by the Engineer, a small opening in the back of the inlet shall be provided in order to drain a low area. Reinforcing bars shall extend through the opening. No reduction in concrete quantities will be made for this opening.

When directed by the Engineer, the top of the inlet shall be sloped slightly to approximately fit the ground line or other conditions.

The floor of the inlet shall be shaped as shown in various "EXAMPLES" on Reinforced Concrete Manhole Standard Drawing RD730 SI.

No addition in concrete quantities shall be made for shaping floor of inlet.

No reduction in pay length of curb, gutter, or curb & gutter will be made through the inlet area.

All castings shall be gray iron and shall comply with the KDOT Standard Specifications.

The mass of castings includes no allowance for fillets and overruns.

Curb and Gutter sections shall be shaped as shown where required by the installation of curb inlets. This work shall be subsidiary to other bid items.

See sheet entitled "Reinforcing Steel for Inlets and Manholes" for details and quantities.

Steps shall be installed in all storm sewer inlets when specified in the plans or when "H" is equal to or greater than 1.8 m. Steps shall comply with the requirements of the KDOT Standard Specification.

For additional notes and details on Light Type Cast Iron Manhole Cover and Ring Type C, and Cast Iron Steps, see Standard Drawing RD730 SI "Reinforced Concrete Manhole".

NO.	DATE	REVISIONS	BY	APP'D
5	4-30-02	Rev. concrete from Class to Grade.	S.W.K.	J.O.B.
4	5-09-00	Revised Gutter width	R.J.S.	J.O.B.
3	12-16-97	Revised Step Spacing	R.J.S.	J.O.B.

KANSAS DEPARTMENT OF TRANSPORTATION

TYPE 22 RADIUS CURB INLET

~~RD747 SI~~

FHWA APPROVAL	5-01-02	APP'D. James O. Brewer	
DESIGNED	DETAILED	QUANTITIES	TRACED Thompson
DESIGN CK.	DETAIL CK.	QUAN.CK.	TRACE CK. Seitz

Drawn By: $$USERNAME$$ Plotted: $$SYTIME$$
File : $$DGNSPEC$$