STATE	PROJECT NO.	YEAR	SHEET NO	TOTAL SHEETS
KANSAS	87 N-0287-01	2003	79B	107

POWER POLE DETAILS

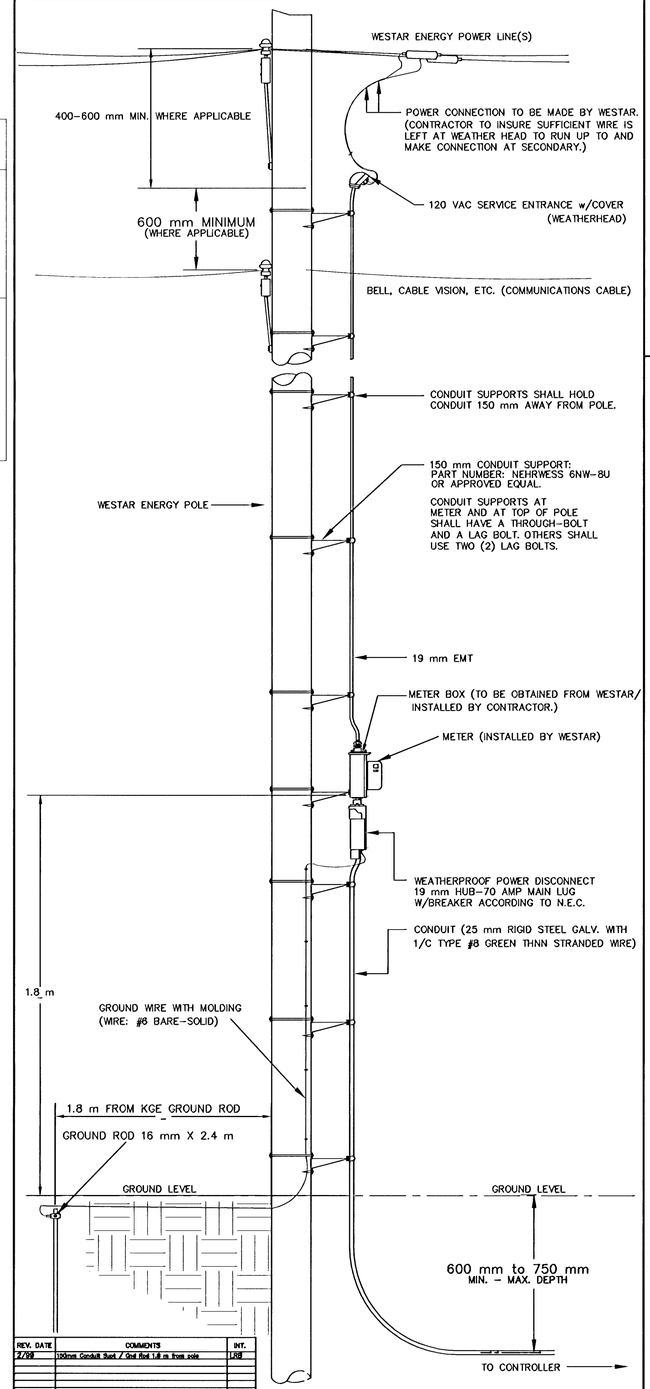

REV. DATE	COMMENTS	INT.
2/98	150mm Conduit Sust / Grd Rod 1.8 m from pole	LRB

T. MASON, TRAFFIC ENGRNG, 2/4/97. FILE: 0 2 - PPSP-MET

SPANWIRE ASSEMBLY DETAILS

1. MAX. SAG = 5% OF SPAN.
2. STANDARD BACKRAKE = 1.5°
3. HEIGHT OF STRAIN WIRE HOOK-UP TO BE DETERMINED BY FIELD ENGINEER. TRAFFIC SIGNAL CABLE TO BE SECURED TO STRAIN (SPAN) WIRE WEATHERABLE NYLON CABLE HANGERS (300 mm CTR.) DETAIL 'B'
4. TETHER CLAMP TO BE DESIGNED TO RELEASE UNDER 'HIGH WIND LOAD' TO PERMINT SIGNAL 'FREE SWING'.

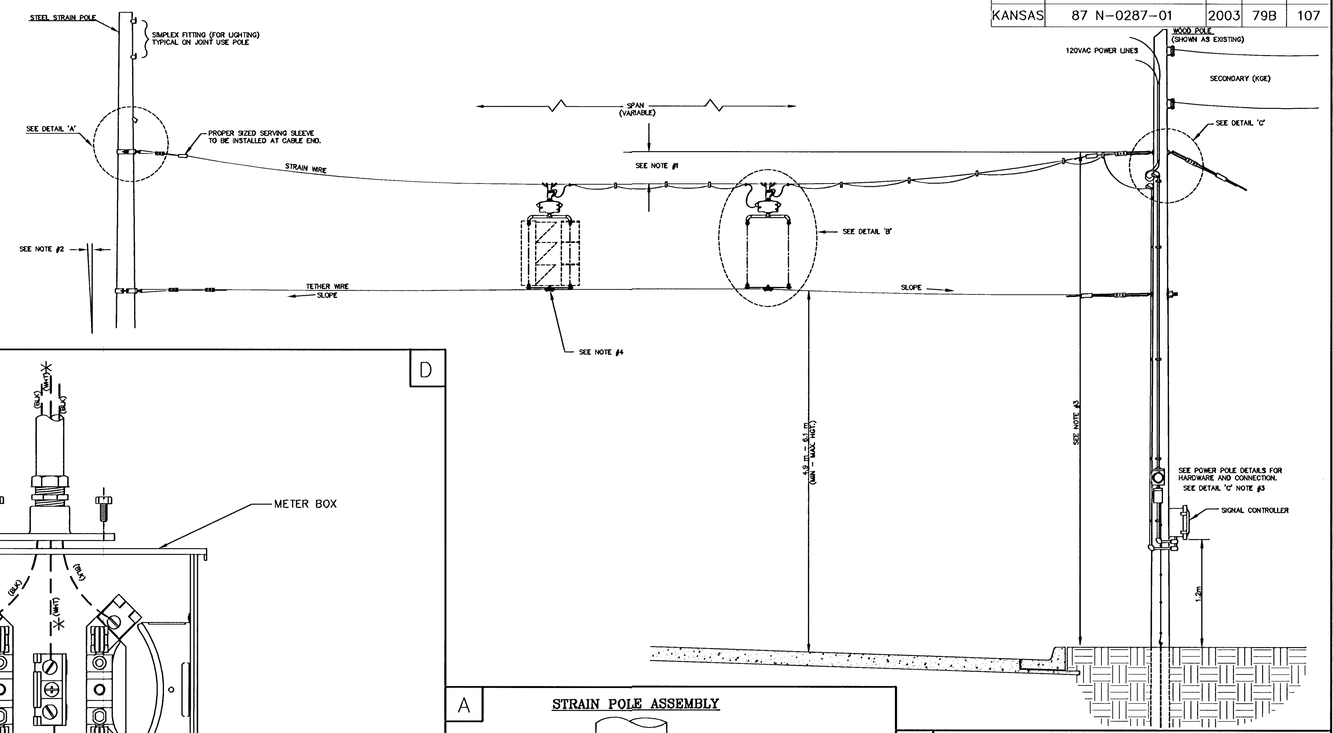

METER BOX & POWER DISCONNECT DETAILS

D

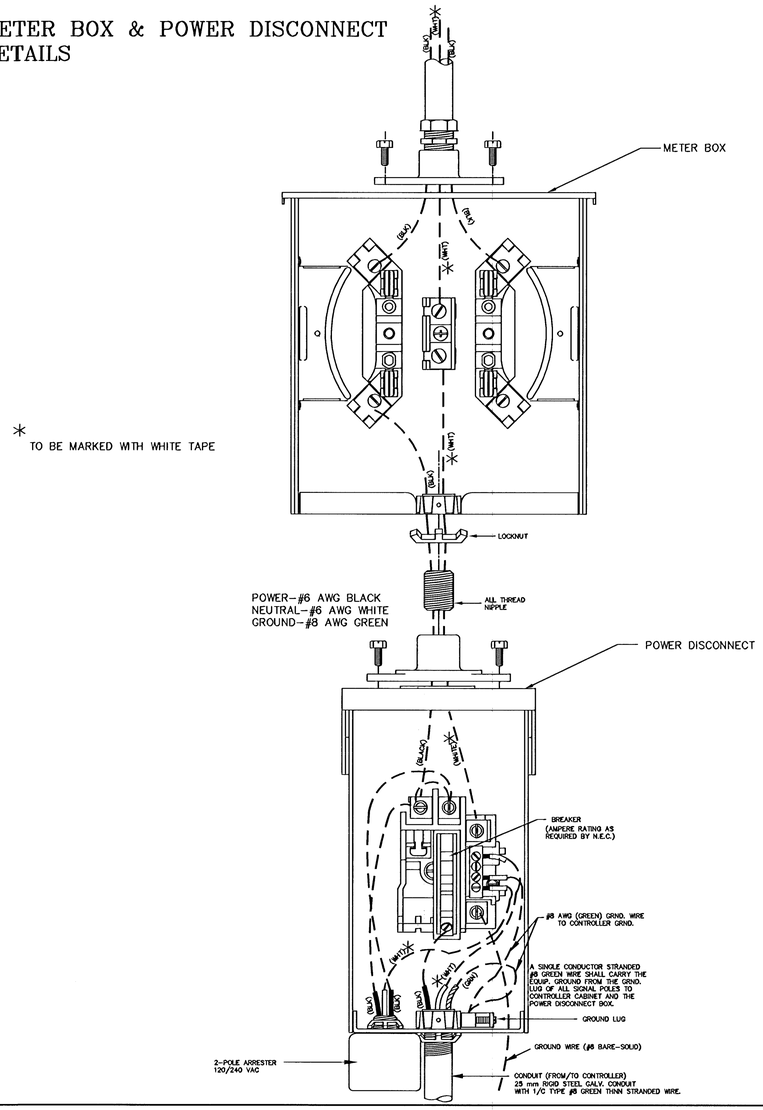

* TO BE MARKED WITH WHITE TAPE

POWER-#6 AWG BLACK
NEUTRAL-#6 AWG WHITE
GROUND-#8 AWG GREEN

A

STRAIN POLE ASSEMBLY

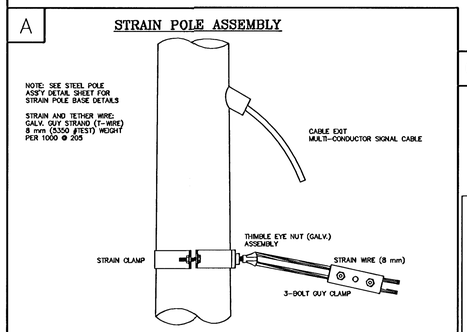

B

SIGNAL BRACKET ASSEMBLY DETAILS

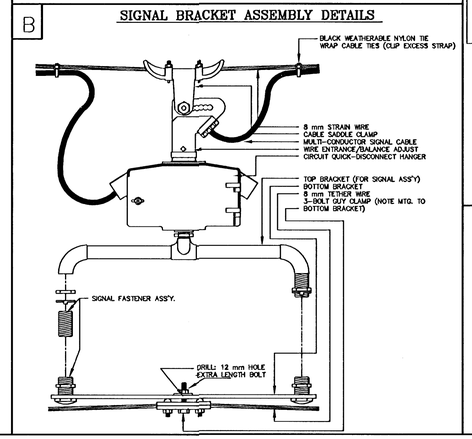

C

WOOD POLE ASSEMBLY DETAILS
KGE POLE EXCLUDED

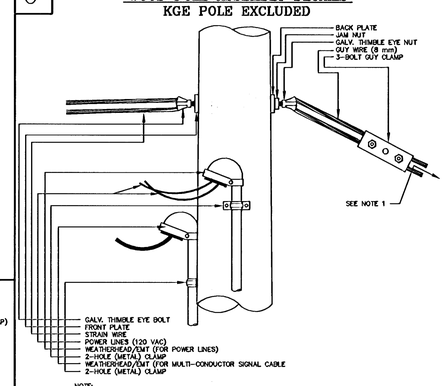

NOTE:
1. GALV. THIMBLE EYE ANCHOR BOLT AND EXPANDING ANCHOR (NOT SHOWN) TO STABILIZE WOOD POLE (WHERE APPLICABLE)
2. ANY COMBINATION OF ROUND/THIMBLE EYE BOLTS AND NUTS MAY BE UTILIZED AS APPLICATION MAY VARY. FIELD ENGINEER TO DETERMINE TYPE OF HARDWARE USED.
3. HARDWARE SHOWN IS TRANSFERRABLE TO STEEL POLE IN WHOLE OF PART WHERE STEEL STRAIN POLE IS USED. (POWER, SIGNAL CABLE, METER, ETC.) FIELD ENGINEER TO MAKE DETERMINATION. STEEL STRAIN POLE APPLICATIONS MAY VARY AS TO MOUNTING ON POLE: USE OF CLAMPS, BANDED BRACKETS, ETC. ARE STD. - FIELD ENGINEER TO DETERMINE BEST TYPE APPLICATIONS.

PROJECT DESCRIPTION
POWER POLE AND SPAN POLE ASSEMBLY DETAILS
STANDARD APPLICATIONS
PROJECT NUMBER

DRAWN BY: TM	APPROVED BY	REVISED: LRB
DATE: Feb. 96		DATE: 2/26/99

CITY OF WICHITA
DEPARTMENT OF PUBLIC WORKS

TRAFFIC ENGINEERING DIVISION	SCALE
RANDALL W. HOSKINS, P.E., TRAFFIC ENGINEER	NO SCALE

DATE	BY	REFERENCES NOTED
		REFERENCES CHECKED