FHWA REGION NO.	STATE	PROJECT NO.	YEAR	SHEET NO.	TOTAL SHEETS
7	KANSAS	87U-1362-01	1993	55	149

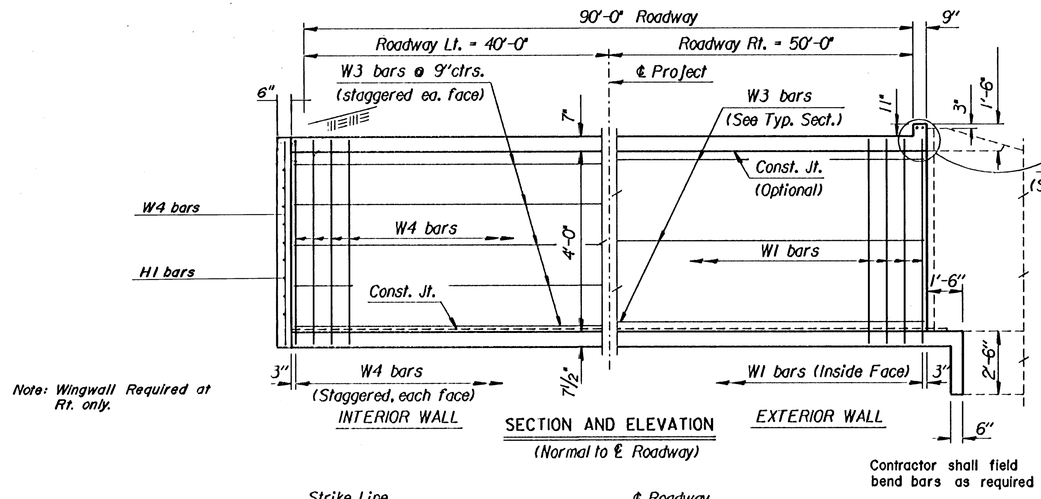

SECTION AND ELEVATION
(Normal to ℄ Roadway)

Contractor shall field bend bars as required

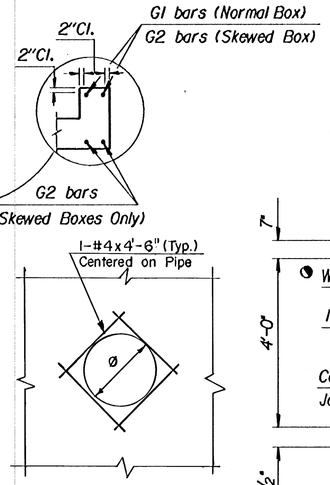

TYPICAL STORM SEWER CONNECTION AT RCB
(Max. 24" Diameter)
(Subsidiary to Storm Sewer Bid Item)

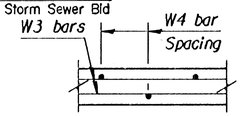

PLAN OF INTERIOR WALL

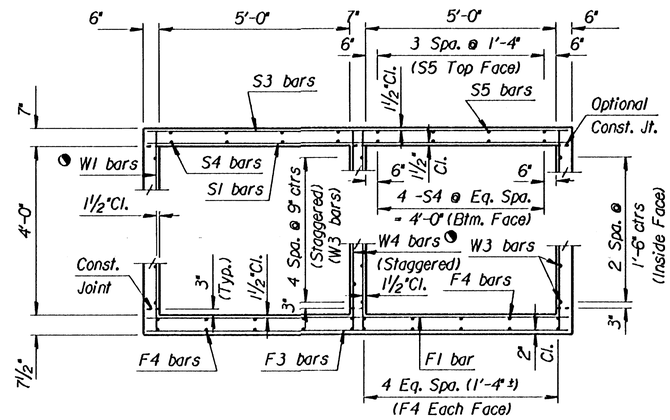

TYPICAL SECTION

See RCB Auxillary Details for Optional Splice.

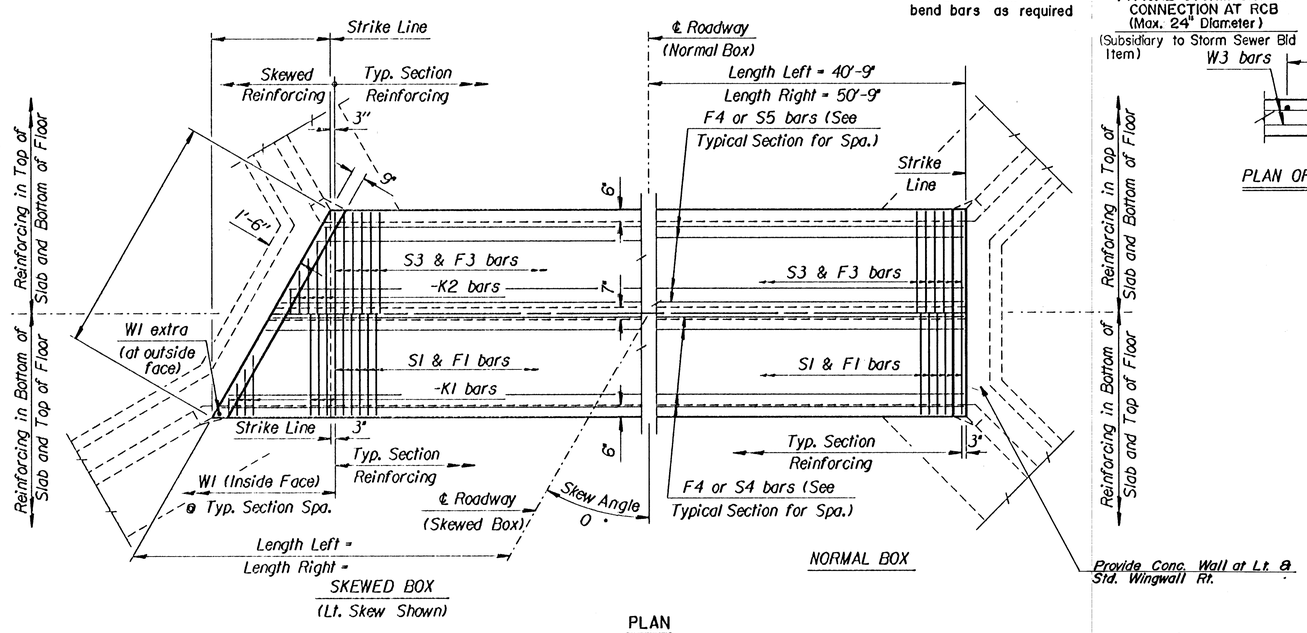

PLAN

GENERAL NOTES

LOADING: HS20-44 AASHTO Specifications, 1983 Edition.
UNIT STRESSES: Class AAA Concrete; f'c = 4,000 p.s.i.
Reinforcing Steel; fy = 60,000 p.s.i.
FILL HEIGHT: Unless otherwise noted, the Design Fill Height is measured from the riding surface at the culvert and shall include the surfacing.
CONCRETE: Class AAA Concrete shall be used throughout. Bevel all exposed edges with a ¾inch triangular moulding. Where Class AAA Concrete (AE) is specified, it shall be placed in the top slab above the Construction Joint.
REINFORCING: All reinforcing shall conform to ASTM A615, Grade 60. All dimensions relative to reinforcing steel shall be to centerline of bar unless otherwise noted.
EXCAVATION: Excavation for culverts less than bridge length shall not be paid for directly but shall be subsidiary to Class AAA Concrete. Excavation for RCB Bridges shall be paid for as Class III Excavation.
SEAL COURSE: A Seal Course may be required by the Engineer. The Seal Course shall be unreinforced Concrete (Commercial Grade) to a minimum depth of 3 inches or as determined by the Engineer. Concrete for the seal course shall be paid for at the unit price of Class AAA Concrete.
FOUNDATION STABILIZATION: Foundation Stabilization may be required as directed by the Engineer. The depth of Foundation Stabilization shall be determined by the Engineer. Foundation Stabilization shall be paid for at the determined Unit Price set for Foundation Stabilization. See Auxiliary Details.
QUANTITIES: The quantities shown in the Culvert Summary include apron and/or soil saver quantities when their construction is required by the plans. Payment for additional quantities that result from including seal course and/or floating apron, as a change in original plans, shall be made at the Unit Price bid for the various items involved. Wingwall quantities shown include all quantities outside the neat lines of the box.
GRANULAR BACKFILL (WINGWALLS): Special backfill procedures may be required at the direction of the Engineer. See Auxiliary Details Sheet.
STRIKE LINE: Wingwalls and that portion of the RCB outside the Strike Line shall be constructed level. Footing for wingwalls shall be constructed with the culvert floor. See wingwall detail sheet.

CULVERT SUMMARY

Flow Line Elev. Lt.	Flow Line Elev. Rt.	Crown Gr. Elev.	Design Fill Ht.	Skew	Left Wings	Right Wings	Scour Apron	Soil Saver	Granular Backfill	Concrete Barrel (Cu.Yds.)	Concrete Wings (Cu.Yds.)	Concrete Total (Cu.Yds.)	Reinf. Steel (Gr. 60) Barrel (Lbs.)	Reinf. Steel (Gr. 60) Wings (Lbs.)	Reinf. Steel (Gr. 60) Total (Lbs.)
192.50	192.30	199.72	5	0	FLARED	FLARED	YES	NO	NO	70.0	7.7	77.7	8303.40	419.72	8723.12

* See Bending Diagram

BAR SCHEDULE

F1 Size	F1 Spa.	F1 No.	F1 Length	F3 Size	F3 Spa.	F3 No.	F3 Length	F4 Size	F4 No.	F4 Length	S1 Size	S1 Spa.	S1 No.	S1 Length	S3 Size	S3 Spa.	S3 No.	S3 Length	S4 Size	S4 No.	S4 Length	S5 Size	S5 No.	S5 Length
4	9"	122	11'-3"	-	-	-	-	4	7½"	147	11'-3"	4	60	31'-4"	4	9"	122	11'-3"	-	-	-	4	7½"	147
11'-3"	4	24	31'-4"	4	24	31'-4"																		

K1 Size	K1 Spa.	K1 No.	K1 Length	K2 Size	K2 Spa.	K2 No.	K2 Length	W1 Size	W1 Spa.	W1 No.	W1 Length	W3 Size	W3 No.	W3 Length	W4 Size	W4 Spa.	W4 No.	W4 Length	G1 Size	G1 No.	G1 Length	G2 Size	G2 No.	G2 Length	H1 Size	H1 Spa.	H1 No.	H1 Length
-	-	-	*	-	-	-	*	4	9"	244	4'-11"	-	-	-	4	33	31'-4"	4	9"	133	4'-11"	5	4	11'-3"	-	-	-	4	6"	9	11'-3"

Minimum Splice Lengths	
#4	1'-4"
#5	1'-8"
#6	2'-0"

SUMMARY OF QUANTITIES

Class AAA Concrete	77.7	C.Y.
Class AAA Concrete (AE)	0.0	C.Y.
Class III Excavation		C.Y.
Reinforcing Steel (Gr. 60)	8730	Lbs.
Reinforcing Steel (Epoxy Coated)	0	Lbs.
Foundation Stabilization (Set)	1	C.Y.
Granular Backfill (Wingwalls) (Set)	1	C.Y.

NO.	DATE	REVISIONS	BY	APP'D

KANSAS DEPARTMENT OF TRANSPORTATION
Sta. 41+40
DOUBLE 5' x 4' RCB

~~Std. No. 2.05.04~~ SEDGWICK CO.

FHWA APPROVAL	6-5-91	APP'D	KENNETH F. HURST
DESIGNED	DETAILED	QUANTITIES	TRACED
DESIGN CK.	DETAIL CK.	QUAN.CK.	TRACE CK.

CONC. FROM BRJ.
PROJ.
DESIGN DATE
DESIGN DATE
DETAIL DATE
QUANTITIES DATE
DETAILED DATE
QUANTITIES DATE
CHECKED DATE
CO. CHECK DATE
DATE
DATE
DATE
DATE

LPROJECTS
ZFA2(200.2)mkea01.dgn
25-NOV-1992 08:55
View=