STATE	PROJECT NO.	YEAR	SHEET NO.	TOTAL SHEETS
KANSAS	87 N-0673-01	2017	58	99

CABINET FOUNDATION NOTES:

1. ALL REINFORCING BAR USED IN THE CONSTRUCTION OF THE CABINET FOUNDATION SHALL BE NO. 4 BARS, EVENLY SPACED AT 12 IN SPACING, +/- 1.5 IN.
2. REBAR SHALL BE ADJUSTED TO ACCOMMODATE CONDUIT.
3. STONE DRAIN MATERIAL SHALL CONFORM TO THE STANDARD SPECIFICATION.
4. MINIMUM NO. 4 COPPER GROUNDING CONDUCTOR FROM CABINET EQUIPMENT GROUND BUS TO GROUND ROD.
5. F&I 2 IN SPARE CONDUIT, STUB OUT 6 IN FROM FACE OF FOUNDATION. F&I DUCT PLUG.

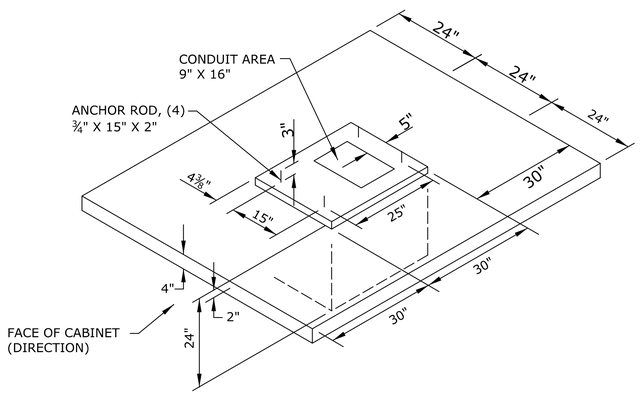

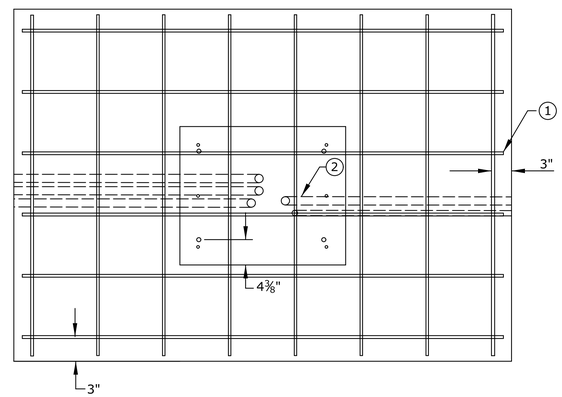

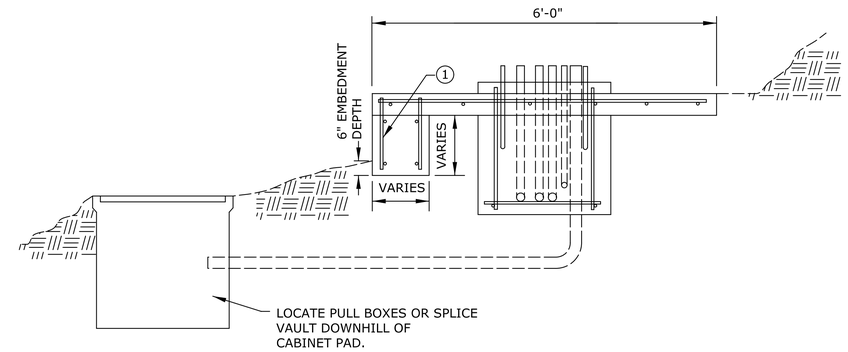

ITS CABINET FOUNDATION ON SLOPE DETAILS

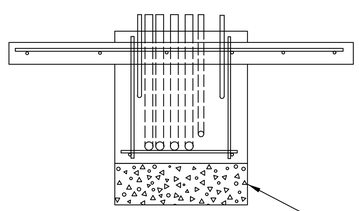

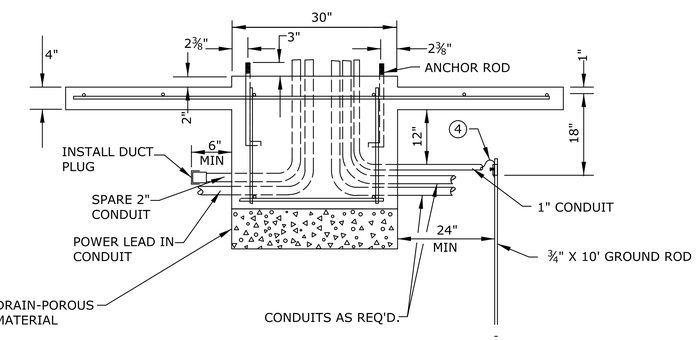

ITS CABINET FOUNDATION DETAILS

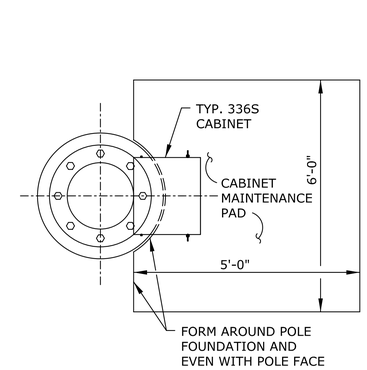

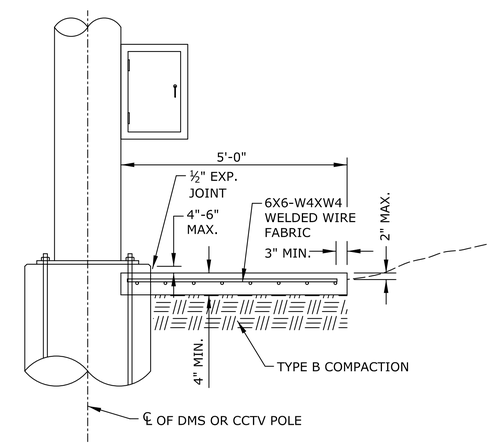

POLE MOUNTED ITS CABINET MAINTENANCE PAD

NO.	DATE	REVISIONS	BY	APP'D

KANSAS DEPARTMENT OF TRANSPORTATION

ITS CABINET FOUNDATION DETAILS

ITS-D06 VERSION DATE: 05-29-17

APP'D			
DESIGNED	DETAILED	QUANTITIES	TRACED
DESIGN CK.	DETAIL CK.	QUAN. CK.	TRACE CK.

Plotted : 14-NOV-2017 10:55

Drawn By : examples
File : ITS-D06.dgn