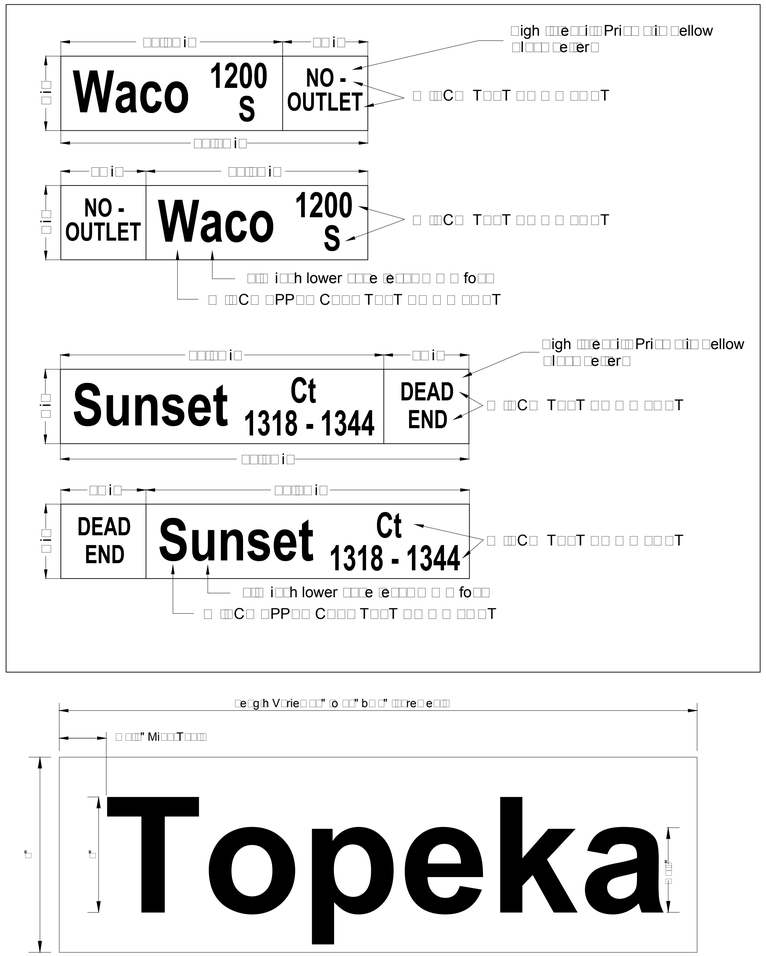

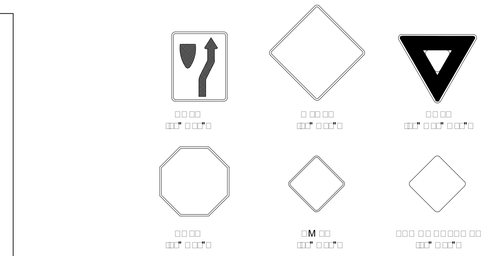

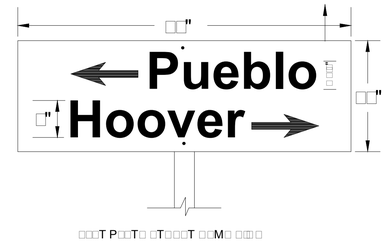

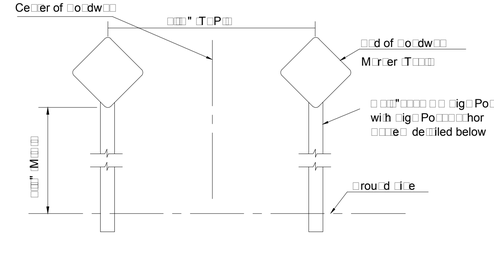

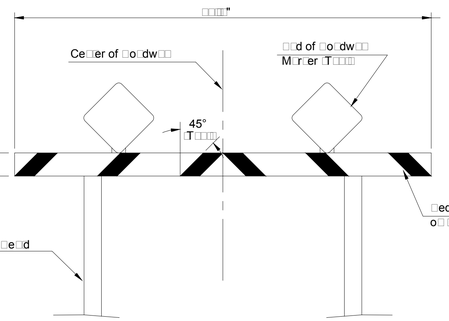

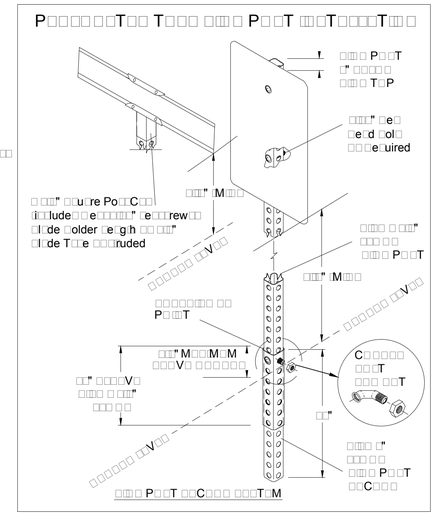

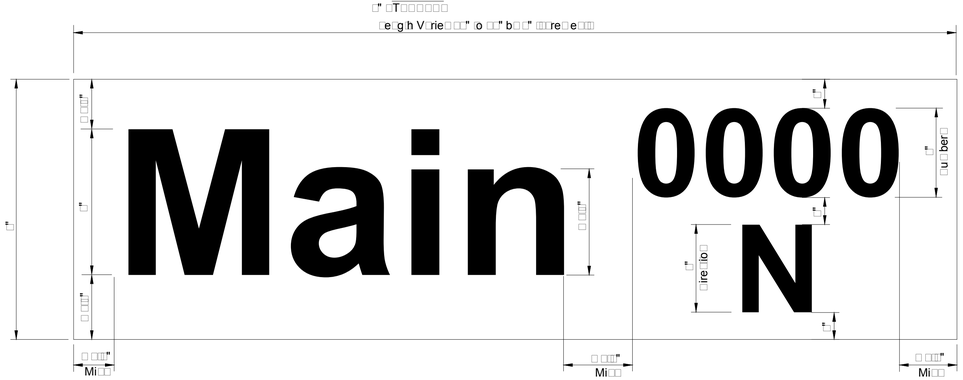

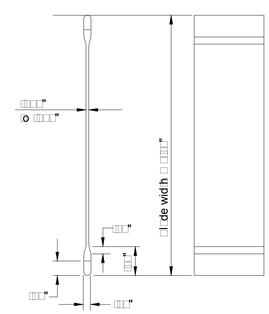

SIGN ASSEMBLY TABLE

[illegible]	[illegible]	[illegible]	[illegible]
Thoroughbred st			
1+68.92	29.5' Lt.	Street Name Sign	2
4+51.50	27.5' Rt.	Street Name Sign	2
Thoroughbred Cir			
0+29.50	27.5' Rt.	Street Name Sign	2
Bellick St			
-0+03	6' Lt. & Rt.	End of Roadway Signs	3
3+83.98	27.5' Lt.	Street Name Sign	2
Marold St			
-0+03	6' Lt. & Rt.	End of Roadway Signs	3