FHWA REGION NO.	STATE	PROJECT NO.	FISCAL YEAR	SHEET NO.	TOTAL SHEETS
7	KANSAS	87N-0094-01	1998	84	202

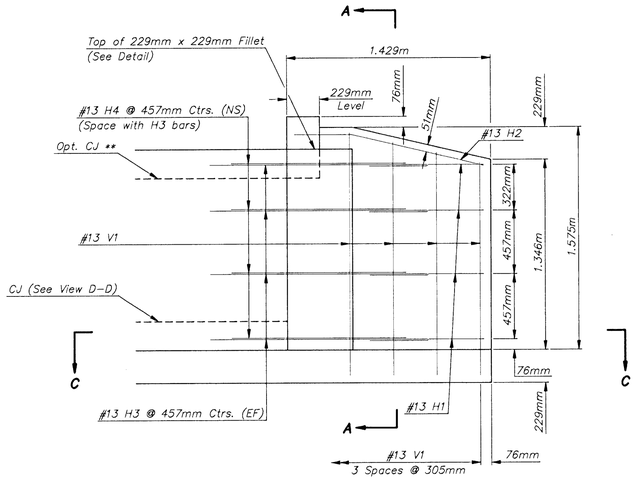

** See RCB Details for location of construction joint.

ELEVATION OF WINGWALL
(Backface Shown)

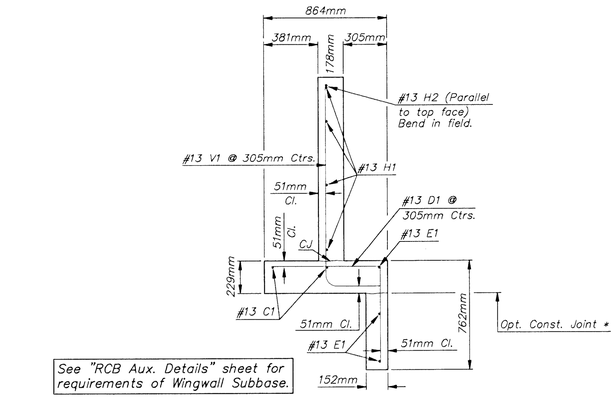

See "RCB Aux. Details" sheet for requirements of Wingwall Subbase.

SECTION A-A

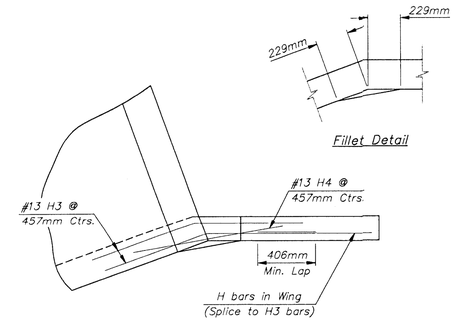

DETAIL OF 229mm x 229mm FILLET
(Plan View)

* NOTE: Const. Jt. may be used at Contractor's option when approved by the Engineer. D1 bars or mesh may be spliced thus: Minimum overlap shall be 381mm. No increase in quantities ot cost shall be allowed when Contractor elects this option.

GENERAL NOTES

UNIT STRESSES: Class AAA Concrete: f'c = 28 MPa (4000 p.s.i.)
Reinforcing Steel: fy = 420 MPa (60,000 p.s.i.)

CONCRETE: Class AAA Concrete shall be used throughout. Bevel all exposed edges with a 19mm triangular molding.

REINFORCING: All reinforcing shall conform to ASTM A615M, Grade 420. Welded Wire Fabric shall conform to ASTM A185M. All dimension relative to reinforcing steel shall be to centerline of bar unless otherwise noted.

QUANTITIES: Wingwall Quantities include all quantities outside the neat lines of the box, excluding the hubguard.

APRON: A 127mm concrete slab shall be constructed between the downstream wings in locations subject to scour only when specified on the plans or by the Engineer. Wire reinforcing mesh shall electrically welded and shall be composed of 152 x 152 – MW13 x MW13 welded wire fabric and shall be classified as kilograms of reinforcing steel.

FOUNDATION AND BACKFILL MATERIAL: Soils judged as high plasticity clays, fat clays, expansive clays, or organic clays are unsuitable for foundation and/or backfill material for wingwalls and will not be used. Where these conditions exist, Foundation Stabilization and/or Granular Backfill (Wingwalls) shall be used as determined by the Engineer. See "RCB Auxiliary Details" sheet for additional details.

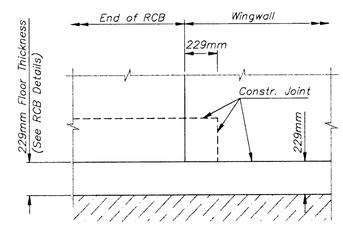

VIEW D-D

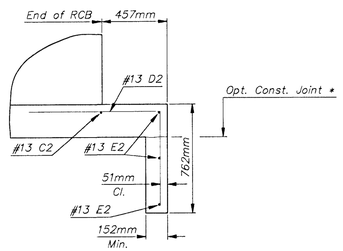

SECTION E-E

NOTE:
EF = Each Face
NS = Near Side
FS = Far Side
CJ = Const. Joint

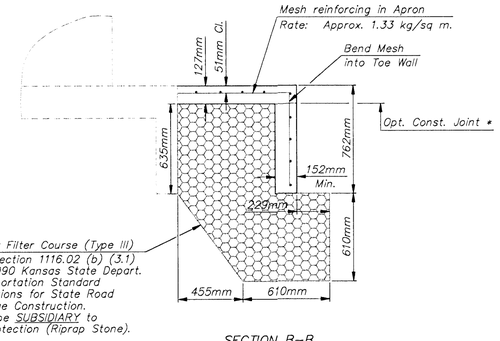

SECTION B-B

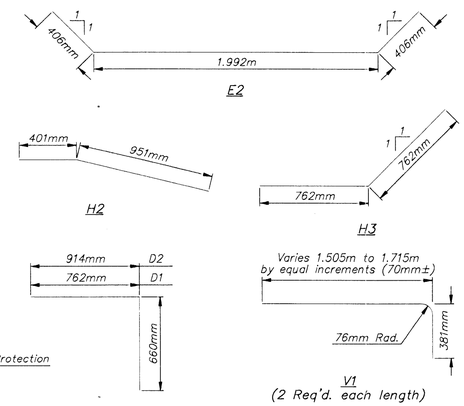

BENDING DIAGRAM
(All dimensions are out to out of bars.)

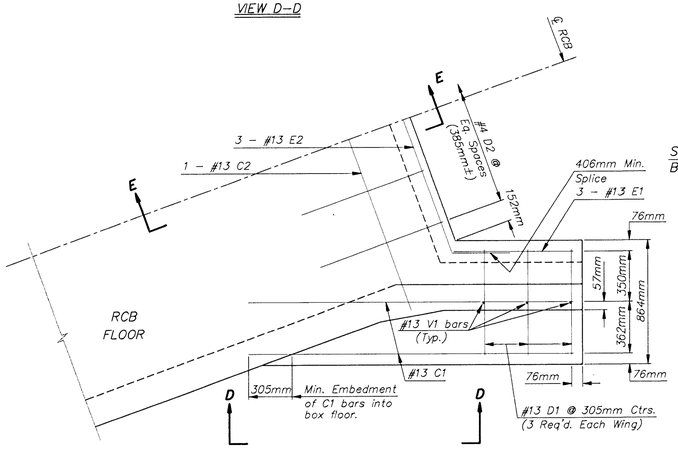

SECTION C-C
(Plan of Footing)

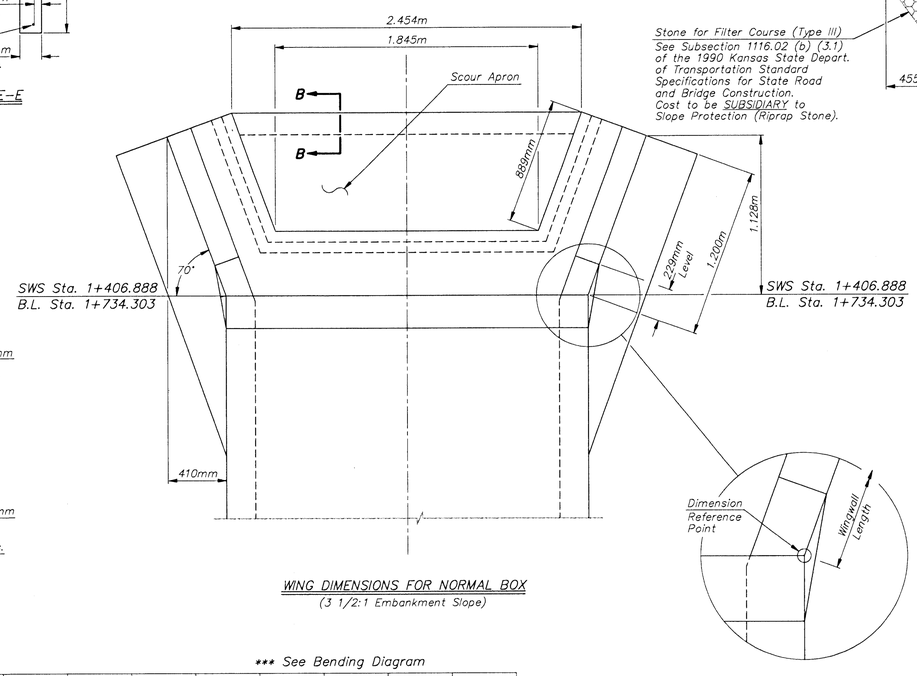

WING DIMENSIONS FOR NORMAL BOX
(3 1/2:1 Embankment Slope)

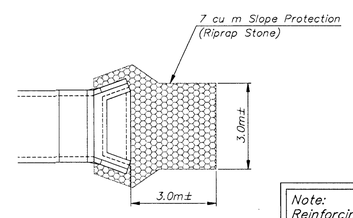

RIPRAP DETAIL

Note:
Reinforcing Steel and Wire Reinforcing Mesh Sizes are Designated in Metric Units.

Slope Protection (Riprap Stone)	
Weight	Minimum Percent Heavier Than:
454 kg	--
227 kg	--
113 kg	--
57 kg	--
34 kg	--
5 kg	--

Heavy Stone 1/4 ton.

Stone for Filter Course (Type III)	
Sieve Size	Percent Retained
152mm	--
127mm	--
102mm	--
76mm	--
51mm	--
25mm	--
13mm	--
9mm	--
No. 4	--

Quantities listed below are included in the Summary of Quantities shown on the RCB details.

WINGWALL QUANTITIES (One End Only) ⌀	
Class AAA Concrete:	
Wingwalls ------	1.75 cu. meter
Apron ------	0.46 cu. meter
Soil Saver ------	--- cu. meter
Reinforcing Steel	89.6 kg
Welded Wire Fabric	4.32 kg

⌀ FOR INFORMATION ONLY SUBSIDIARY

KDOT METRIC

NOTE: Reinforcing Bar List is for both wings at one end of box only.

*** See Bending Diagram

		#13 C1	#13 D1	#13 E1	#13 C2	#13 D2	#13 E2	#13 V1	#13 H1	#13 H2	#13 H3	#13 H4
0° Skew	No.	4	6 ***	6	1	6 ***	3 ***	8	8	2	16 ***	8
	Length	2.279m	1.422m	0.838m	2.540m	1.575m	2.804m	***	0.802m	1.352m	1.524m	1.067m

PROJECT NUMBER					
472 - 82906					
DESIGN STAFF	DRAWN STAFF	APPROVED JFB	DATE NOV 98	SCALE NONE	PROJ NUMBER 95-05-E026 DIRECTORY centzoo\sws SHEET NAME wingwall.dwg

STORM SEWER IMPROVEMENTS
WINGWALL DETAILS
CENTRAL AVENUE - PHASE 1 - WEST ST TO MCLEAN

BAUGHMAN COMPANY P.A.
ENGINEERING, SURVEYING, & PLANNING
316-262-7271 • 315 ELLIS • WICHITA, KANSAS 67211

SHEET 84 OF 202